CIRCUIT DIAGRAMS

JSM-5200

SCANNING MICROSCOPE

JEOL

NO. SSM5200－2
(MP152001)

JEOL LTD./JEOL TECHNICS LTD.

Tokyo Japan

8902002KP

JEOL TECHNICS LTD.

P/N	No.	MARK	DRAWING NAME	PAGE	
	GH00188		INTERCONNECTION	1	
72009720	00567	AA	LV Power Supply	4	
72004221	00161	AB	Rectifer B		(7)
72001419	00003	AC	+24V REGU B		(5)
72001427	00004	AD	+15V REGU B		(5)
72005449	00253	AQ	Connector B		(8)
72010418	00600	AS	+30V/-30V REGU B	9	
72010426	00601	AT	+15V/-15V REGU B	10	
72009738	00568	BB	HV Power Supply	11	
72001532	00015	BC	CRT-HT B		(11)
72004248	00136	BD	EOS-HT B		(11)
72001338	00017	BE	Filament B		(11)
72001567	00018	BF	HT-Control B		(12)
72009746	00569	CC	EOS	13	
72009754	00570	DD	OP Panel	14	
72009762	00571	DE	ACC CONT B	16	
72009771	00572	DF	KEY Display I/O B	18	
72010906	00641	DH	Up/Down SW B	20	
72009789	00574	EE	SCAN Controller	21	
72009797	00575	EF	Logic B	22	
72012356	00711	EH	Mag. Control B	25	
72012348	00710	EJ	Lens B	32	
72009801	00576	EK	Scanning B	40	
72009151	00503	EL	TV Video B	43	
72010850	00637	EN	8-BIT CPU B	44	
72013166	00721	EP	Link B	46	
72010931	00647	FF	EVAC Controller	48	
72001664	00027	FH	Interrupt1 B		(48)
72001672	00028	FJ	Interrupt2 B		(48)
72009657	00524	FK	EVAC Control B	49	
72007565	00358	HH	DEF-COIL Driver	51	
72007379	00359	HJ	EOS Drive B	52	
72007387	00360	HK	CRT Drive B	53	
72009843	00580	JJ	LED Display	54	
72010884	00642	JK	5200 SW B	55	
72010892	00644	JM	Stigma Offset B	56	
72007450	00368	KK	CRT Display	57	
72009258	00513	KL	CRT Control B	58	
72010990	00653	LL	Checker	59	
72010809	00636	LN	Checker/Display B	60	
72009941	00573	WW	本体配線		
72011007	00654	ZZ	標準附属品		

P/N	No.	MARK	DRAWING NAME	PAGE	
	GH00188		INTERCONNECTION	1	
72001419	00003	AC	+24V REGU B		(5)
72001427	00004	AD	+15V REGU B		(5)
72001532	00015	BC	CRT-HT B		(11)
72001338	00017	BE	Filament B		(11)
72001567	00018	BF	HT-Control B		(12)
72001664	00027	FH	Interrupt1 B		(48)
72001672	00028	FJ	Interrupt2 B		(48)
72004248	00136	BD	EOS-HT B		(11)
72004221	00161	AB	Rectifer B		(7)
72005449	00253	AQ	Connector B		(8)
72007565	00358	HH	DEF-COIL Driver	51	
72007379	00359	HJ	EOS Drive B	52	
72007387	00360	HK	CRT Drive B	53	
72007450	00368	KK	CRT Display	57	
72009151	00503	EL	TV Video B	43	
72009258	00513	KL	CRT Control B	58	
72009657	00524	FK	EVAC Control B	49	
72009720	00567	AA	LV Power Supply	4	
72009738	00568	BB	HV Power Supply	11	
72009746	00569	CC	EOS	13	
72009754	00570	DD	OP Panel	14	
72009762	00571	DE	ACC CONT B	16	
72009771	00572	DF	KEY Display I/O B	18	
72009941	00573	WW	本体配線		
72009789	00574	EE	SCAN Controller	21	
72009797	00575	EF	Logic B	22	
72009801	00576	EK	Scanning B	40	
72009843	00580	JJ	LED Display	54	
72010418	00600	AS	+30V/-30V REGU B	9	
72010426	00601	AT	+15V/-15V REGU B	10	
72010809	00636	LN	Checker/Display B	60	
72010850	00637	EN	8-BIT CPU B	44	
72010906	00641	DH	Up/Down SW B	20	
72010884	00642	JK	5200 SW B	55	
72010892	00644	JM	Stigma Offset B	56	
72010931	00647	FF	EVAC Controller	48	
72010990	00653	LL	Checker	59	
72011007	00654	ZZ	標準附属品		
72012348	00710	EJ	Lens B	32	
72012356	00711	EH	Mag. Control B	25	
72013166	00721	EP	Link B	46	

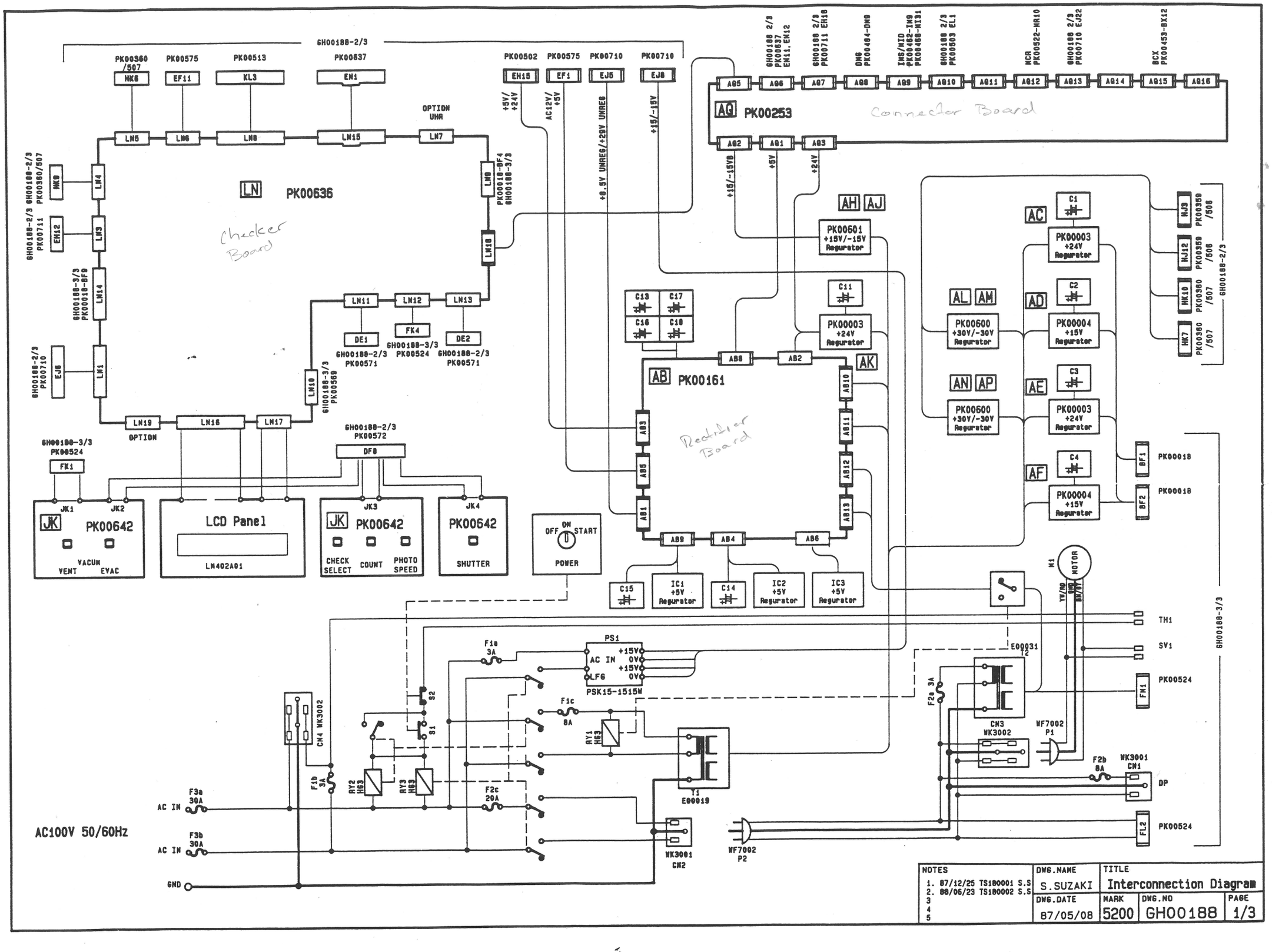

GH00188-2/3
PK00360 /507
PK00575
PK00513
PK00637
PK00502
PK00575
PK00710
PK00710
OPTION UHR
LN PK00636
Checker Board
AQ PK00253
Connector Board
AH AJ
PK00601 +15V/-15V Regurator
AC
PK00003 +24V Regurator
AL AM
PK00600 +30V/-30V Regurator
AD
PK00004 +15V Regurator
AN AP
AE
AF
PK00004 +15V Regurator
AK
AB PK00161
Rectifier Board
PK00018
PK00018
JK PK00642
VACUM
VENT
EVAC
LCD Panel
LM402A01
JK PK00642
CHECK SELECT
COUNT
PHOTO SPEED
PK00642
SHUTTER
OFF ON START
POWER
IC1 +5V Regurator
IC2 +5V Regurator
IC3 +5V Regurator
MOTOR
TH1
SV1
PK00524
PK00524
PS1
AC IN
PSK15-1515W
E00031
CN3 WK3002
WF7002 P1
WK3001 CN1
DP
T1 E00019
WK3001 CN2
WF7002 P2
CN4 WK3002
AC IN
AC IN
GND
AC100V 50/60Hz
NOTES
1. 87/12/25 TS180001 S.S
2. 88/06/23 TS180002 S.S
3
4
5
DWG.NAME S.SUZAKI
DWG.DATE 87/05/08
TITLE Interconnection Diagram
MARK 5200
DWG.NO GH00188
PAGE 1/3

GH00188-3/3 OIL TANK
P28
GH00188-3/3 PNT HT
GH00188-1/3 PK00635 LN13
DE2
DE10
DE7
HT
FILAMENT
SPOT SIZE
DE1
LN11 PK00636 GH00188-1/3
DE
PK00571
IMAGE
CONTRAST
BRIGHTNESS
DE4
DE3
DE5
DE6
BF9 PK00018 GH00188-3/3
FLAT PANEL
DF7
GH00188-1/3 PK00642
JK4
JK3
JK2
DF8
DF6
DF
PK00572
STIGMATOR
FINE SHIFT
X
FINDER
Y
FOCUS
MAGNIFICATION
FINE
AUTO
COARSE
VIEW
DF9
DF5
DF2
DF1
DF4
CAMERA
PILOT LAMP PL1
GH00217-1/3 LN15
OPTION
OPTION
GH00217-1/3 PK00253
AB6
SW1
CPU-RESET
EN9
EN8
EN
PK00637
8 bit CPU
EN12
EN11
EN10
EN1
EN2
EN3
EN4
EN6
EN5
EN7
OPTION
JM
PK00644
GH00188-1/3 PK00636 LN3
EH13
EH5
EH14
EH6
EH12
EH17
EH2
EH15
EH18
OPTION
OPTION
OPTION
OPTION
AB3 PK00161 GH00188-1/3
AB7 PK00253
EH1
EH10
EH11
EH20
EH16
TR3
OPTION PK00453-8X14
EK12
EK7
EK3
EK
PK00576
Scanner Board
EK4
EF2
EF
PK00575
EK1
EK13
EK10
PK00522-PJ11 OPTION MCR
EF6
EF18
EF21
EF9
EF8
OPTION SIU
EK11
EK6
EK2
OPTION PK00484-DM7
OPTION PK00488-MI48
OPTION EXT Z-MOD
OPTION PK00452-BX8
OPTION PK00522-MCR
CHECK
EF20
EF25
OPTION PK00452-BX7
CHECK
EF19
EF23
OPTION PK00452-BX10
OPTION PK00468-MI20
EF10
EF15
OPTION EXT
EF17
Logic Board
EF7
EF15
PK00467-MI15 OPTION
EF11
EF24
EF22
EF1
LN6 PK00636 GH00188-1/3
FK8 PK00524 GH00188-3/3
FK10 PK00524 GH00188-3/3
A05 PK00161 GH00188-1/3
GH00188-3/3 Oil Tank PK00566
EH9
EH4
EH7
EH19
EH8
mas' Control Board
EJ15
EJ
PK00710
EJ14
EJ2
EJ4
EJ9
EJ8
EJ5
EJ17
EJ16
EJ11
OL
CL
STIGMA
AB1 PK00161
P81 PK00667
GH00188-1/3
GH00188-3/3
Lense Drive Board
OPTION RAD
EJ20
EXT TV-OUT
PJ1
GH00188-3/3 CRT
P27
DFU OPTION
HJ1
HJ
PK00359 /506
GH00188-3/3 EOS SCAN COIL
HJ13
HJ11
HJ10
HJ4
HJ5
HJ9
IC1
IC2
R1/2
R3/4
TR1
OPTION
HJ15
HJ8
HJ6
HJ14
ATT
HJ2
HJ7
HK2
EOS Drive Board
KL3
KL
PK00513
CRT Control
KL2
KL1
ATT
CN1
V1
EL9
EL8
EL6
EL7
EL
PK00503
Video Board
EL2
EL1
EL3
PK00253 AB10 GH00188-1/3
EL5
EL4
OPTION
EK5
EK9
EK8
LN4
LN5
HK9
HK6
HK3
HK13
HK1
HK8
HK
PK00360 /507
CRT Drive-B
HK10
HK7
HK5
HK4
HK11
HK12
HK15
HK14
HJ3
HJ12
HOR AL/AM
VERT AN/AP
PK00600
GH00188-1/3
IC3
R5
IC4
R6
TR2
TR3
EJ18
EJ13
EJ12
OPTION
RAD OPTION
EJ7
EJ1
EJ6
PK00536 LN2 GH00188-1/3
EJ19
EJ3
EJ10
OPTION DFU
TR1/2
R1-3
BAN

NOTES	DWG.NAME	TITLE
1. 87/12/25 TS180001 S.S 2. 88/06/23 TS180002 S.S 3 4 5	S.SUZAKI	Interconnection Diagram
	DWG.DATE	MARK / DWG.NO / PAGE
	87/05/08	5200 / GH00188 / 2/3

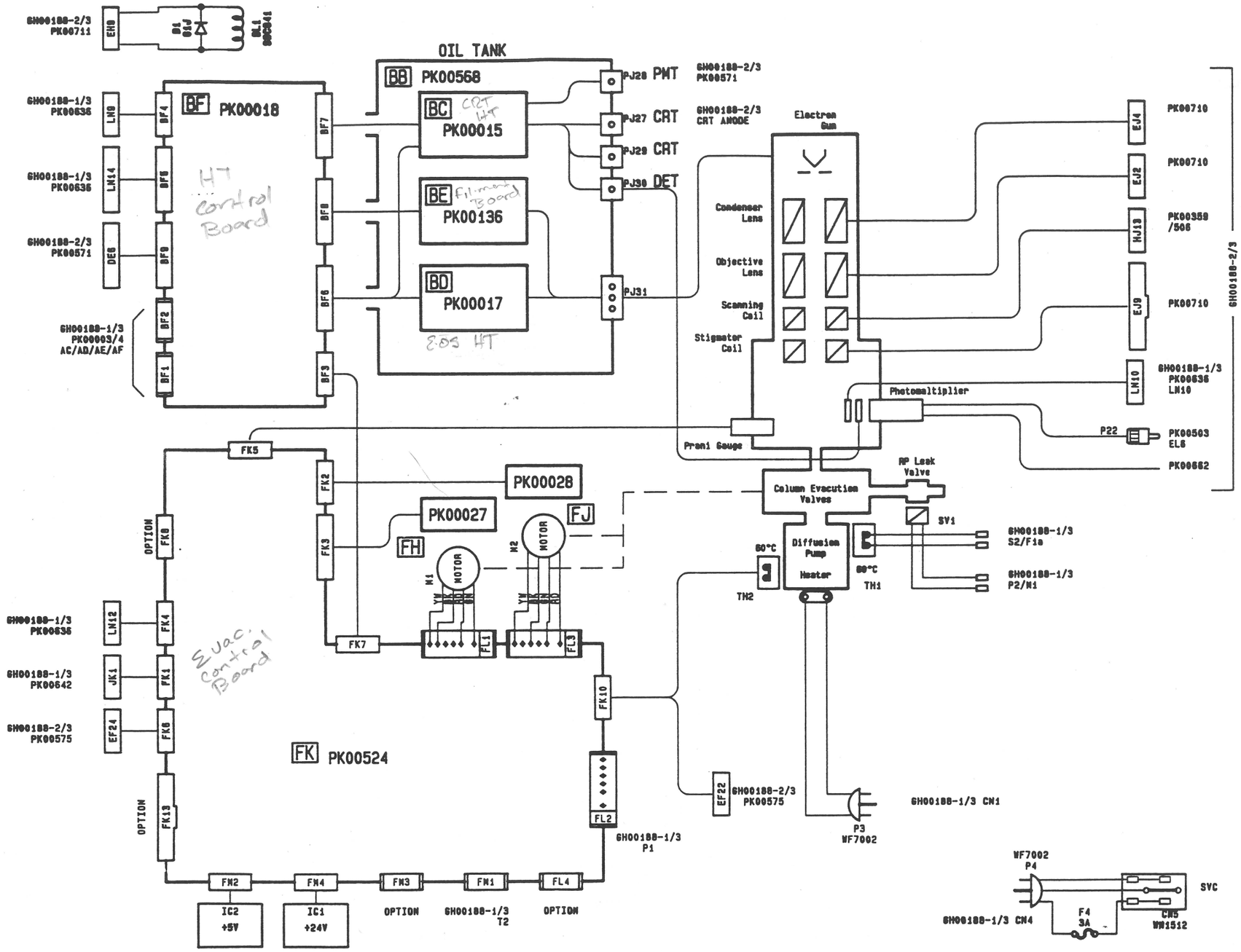

NOTES	DWG.NAME	TITLE			
1. 87/12/25 TS100001 S.S 2. 88/06/23 TS100002 S.S 3 4 5	S.SUZAKI	Interconnection Diagram			
	DWG.DATE	MARK	DWG.NO	PAGE	
	87/05/08	5200	GH00188	3/3	

PK00567 - 1/5

図番

PS1
PSK15-1515W
AC100V
+15V
0V
+15V
0V
EJ8
PK00710

THI
SVI
PK00647

F1b 3A
F1a 3A
F1c 8A

CN4 WK3002
SVC

CN3 WK3002
PK00836
6
1
FL2

FW7002 P1
M
M1

WK3002 CN2
F2c 20A
P2 FW7002

From DP.
PK00647
CN1 WK3001
F2b 8A
F2a 3A
G
2
1

AC100V
50/60Hz
2KVA
AC IN
F3b 30A BK
AC IN
F3a 30A RD
GND
GN

HG3 RY2
HG4 RY3

FN1 option
FM1 To PK00524
FM1A Option

PK00161 AB12
PK00161 AB13
T2 E00031

P3
F4 3A
CN5

RY1 HG3

T1 E00019.

24 23 AC
22 21 AD
20 19 AE
18 17 AF
PK00567-2/5

29 4 28 AL,AM
32 13 31 AN,AP
PK00567-3/5

27 26 25 16 15
PK00567-5/5

11 10 AB11
7 30 8 9 AB10
PK00567-4/5

△						
△						
△						
△						
△						
△						
② 変更	63.6.23					
① 新規	62.11.25.					
訂正						

記事

出図印

承認	検図	設計	製図	写図
佐 62.12.15 藤			鈴 62.12.15 藤	

AA

名称 Low-Voltage Power Supply

図番 PK00567-1/5

Y 5027 A3 E) 58.6 1000

株式会社 日電子テクニクス

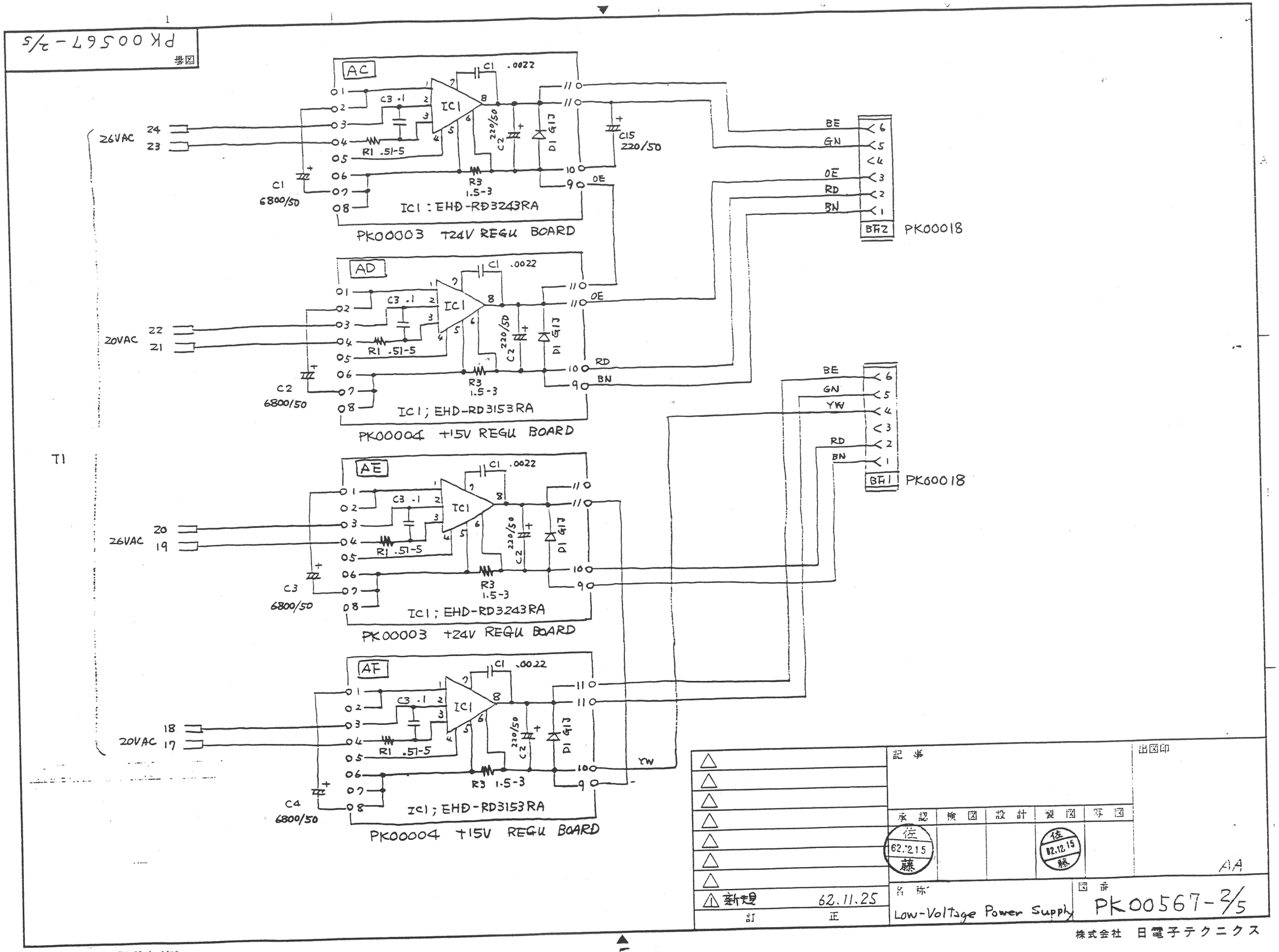
PK00567-2/5
図番
AC
AD
AE
AF
26VAC
20VAC
T1
IC1 : EHD-RD3243RA
PK00003 +24V REGU BOARD
IC1 ; EHD-RD3153RA
PK00004 +15V REGU BOARD
C1 .0022
C3 .1
R1 .51-5
R3 1.5-3
C2 220/50
C15 220/50
D1 G1J
C1 6800/50
C2 6800/50
C3 6800/50
C4 6800/50
BE
GN
OE
RD
BN
YW
BH2 PK00018
BH1 PK00018
記事
出図印
承認
検図
設計
製図
写図
佐 62.12.15 藤
AA
新規 62.11.25
訂正
名称
Low-Voltage Power Supply
図番
PK00567-2/5
株式会社 日電子テクニクス

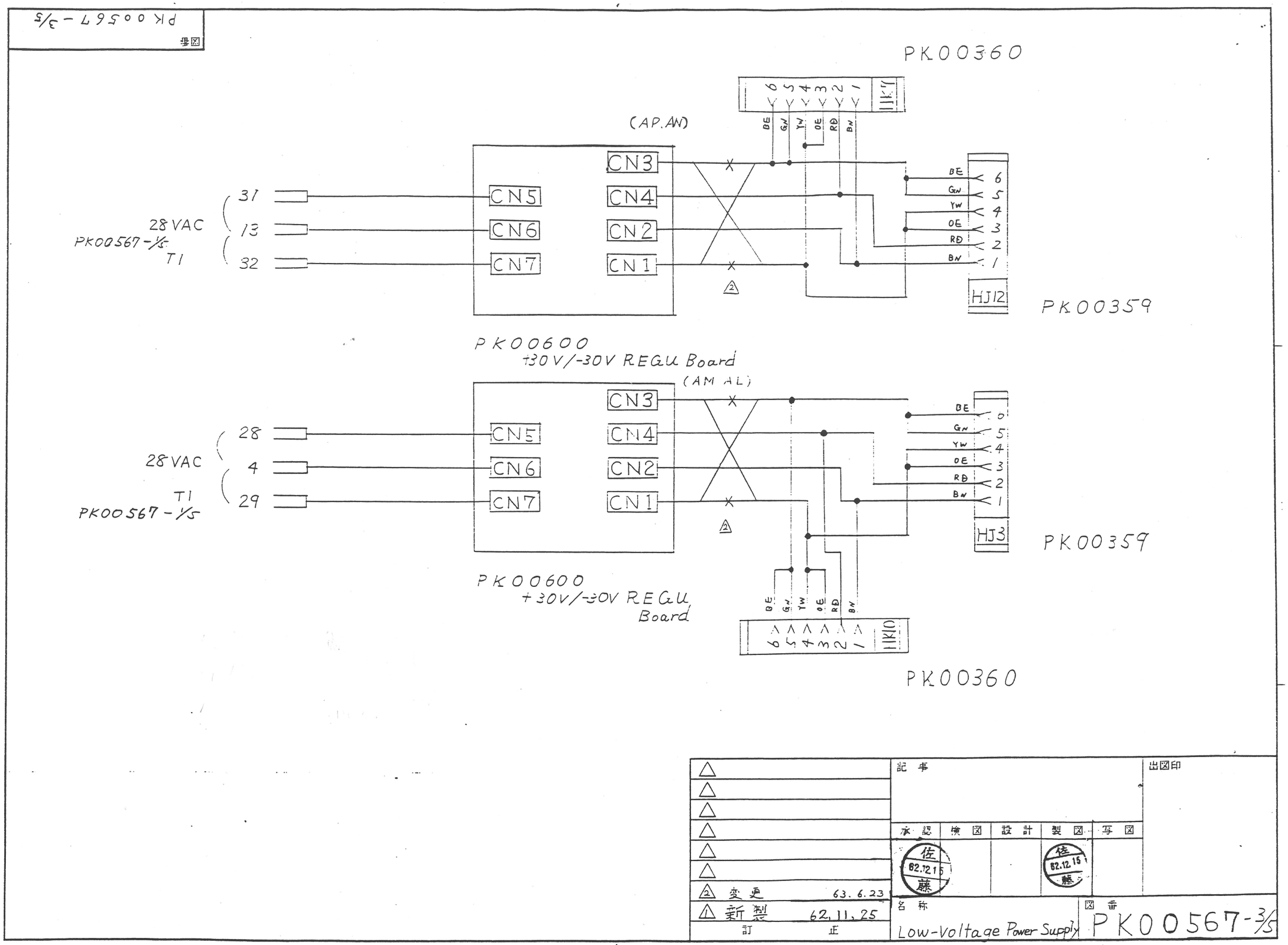
PK00567-3/5
図番
PK00360
(AP.AN)
CN3
CN4
CN2
CN1
CN5
CN6
CN7
31
13
32
28VAC
PK00567-1/5
T1
BE
GN
YW
OE
RD
BN
HJ12
PK00359
PK00600
+30V/-30V REGU Board
(AM AL)
28
4
29
28VAC
T1
PK00567-1/5
HJ3
PK00359
PK00600
+30V/-30V REGU Board
PK00360
記事
出図印
承認
検図
設計
製図
写図
佐藤 62.12.15
2 変更 63.6.23
1 新製 62.11.25
訂正
名称
Low-Voltage Power Supply
図番
PK00567-3/5
Y 5027 A3 E) 58.6 1000
株式会社 日電子テクニクス

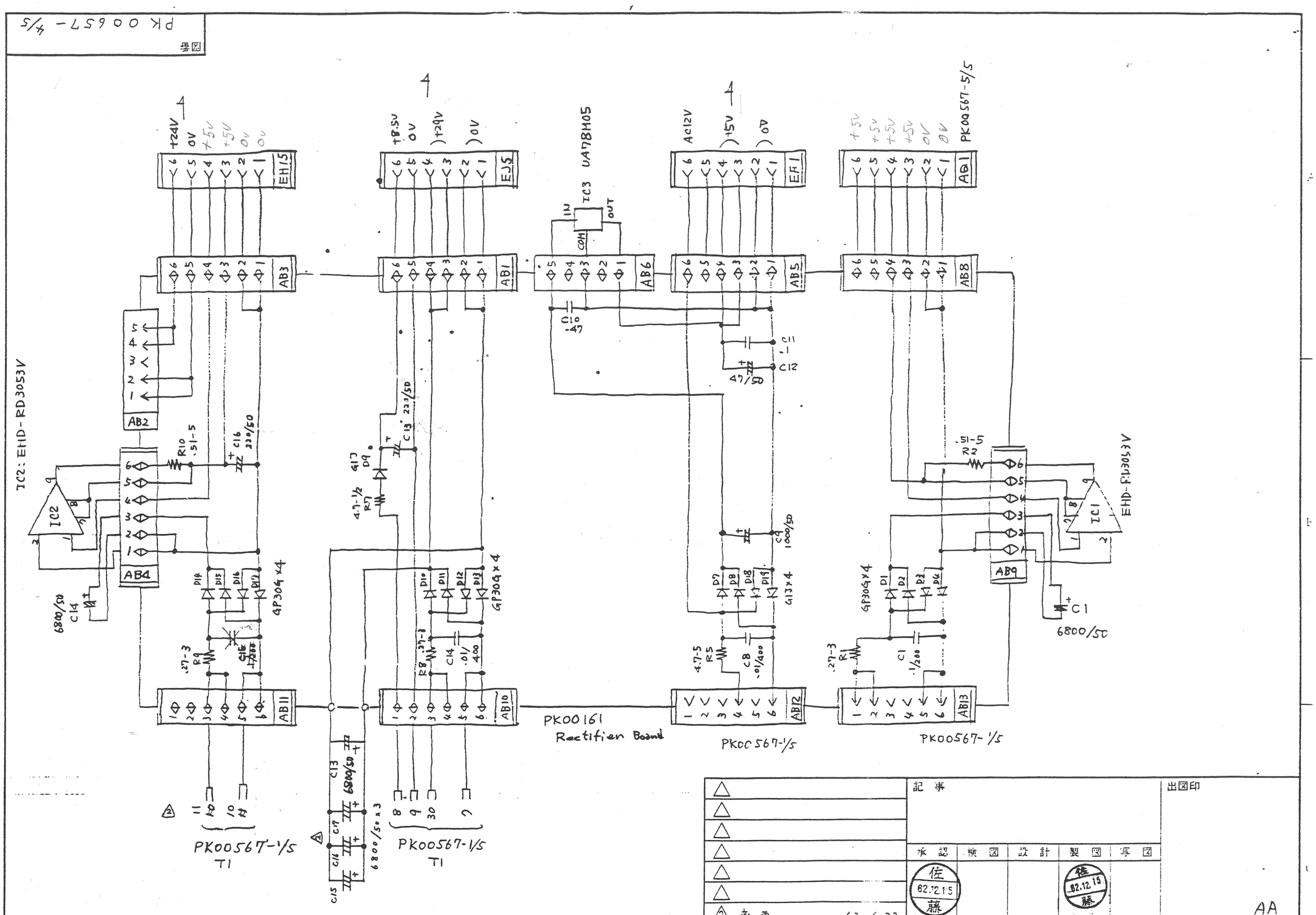

Y 5027 A3 (E) 58.6 1000

株式会社 日電子テクニクス

図番 PK00567-5/5

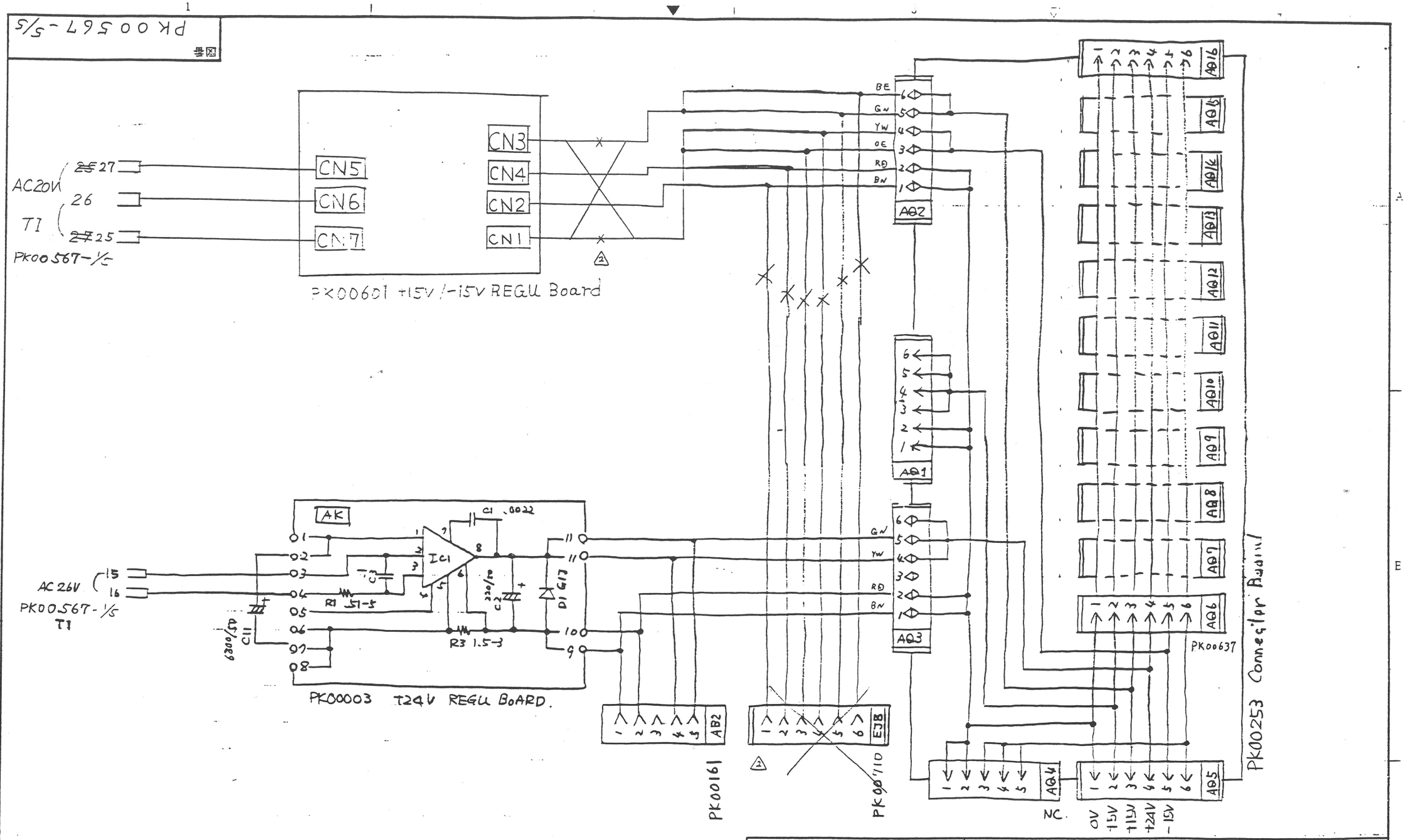

△		記事				出図印
△						
△						
△		承認	検図	設計	製図	写図
△		佐 62.12.15 蒸			佐 62.12.15 藤	
△						
△						
2	変更 63.6.23					AA
1	新製 62.11.25	名称 Low-Voltage Power Supply			図番 PK00567-5/5	
訂	正	株式会社 日電子テクニクス				

Y 5027 A3 E) 58.6 1000

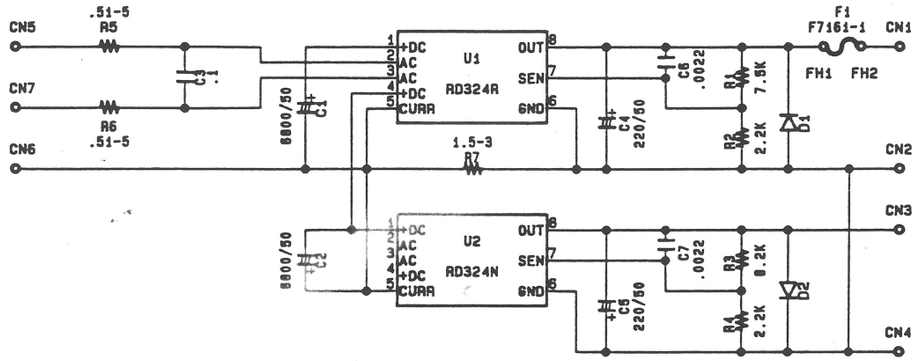

NOTES	DWG.NAME	TITLE			
1 2 3 4 5	T.SATOH	+30/-30V Regu Board			
	DWG.DATE	MARK	DWG.NO	PAGE	
	86/10/15	AR	PK00600	1/1	

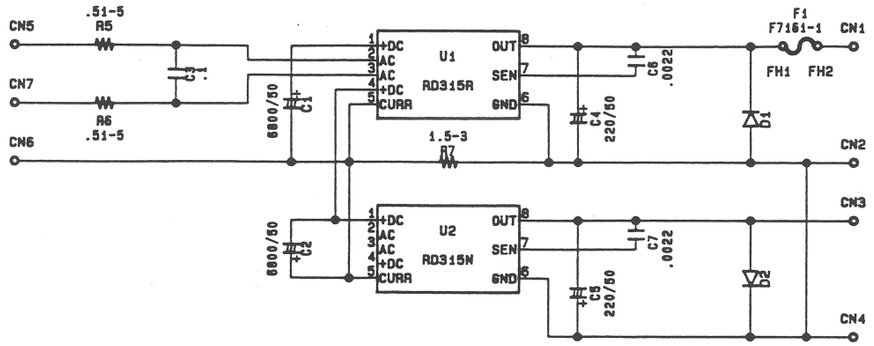

NOTES	DWG.NAME	TITLE			
1 2 3 4 5	T.SATOH	+15/-15V Regu Board			
	DWG.DATE	MARK	DWG.NO		PAGE
	86/10/15	AS	PK00601		1/1

PK00018 HT Control Board.

TR18 D819 TR19 C1617 TR17 C1617 TR16 D819 TR14 MJE3055 TR15 MJE3055 TR11 MJE3055 TR12 MJE3055 TR9 C1617 TR6 MJE3055 TR7 MJE3055 TR3 C1617

Low-Voltage Power Supply PK00567 DE6

Acc Control Board PK00571

Check/Display Board PK00636 LW14 LW9

Evn. Control B. PK00524 FK7

BF1 BF2 BF9 BF5 C4 BF4 BF3

BF8 BF7 BF6

C1 .1 R1 100k T1 E00003 BD BC T2 E00003 BE

PMT P3 CRT PK00368 CRT OPTION DET PK00569 GUN PK00569

R12 V1 C11 C9 C10 C8 R3 200k R2 680k 2200pf/BL C4 R14 1M R13 1M SL1 500M R16 500M R15 C13 C12

C9~C13 1000p/30k

R8 560M R10 1M C6 .1 C7 4700/2k 680k

SDC 841 ΦC DC24V D1 G1J SL1 ソレノイド

EH9 EH22

△		記事				出図印
△						
△						
△		承認	検図	設計	製図	写図
△		佐 62.12.15 藤			佐 62.12.15 藤	
△2 変更	63.6.23					BL
△1 訂正	62.11.25	名称 High-Voltage Power Supply			図番 PK00568 -1/2	

Y 5027 A3 (E) 58.6 1000

株式会社 日電子テクニクス

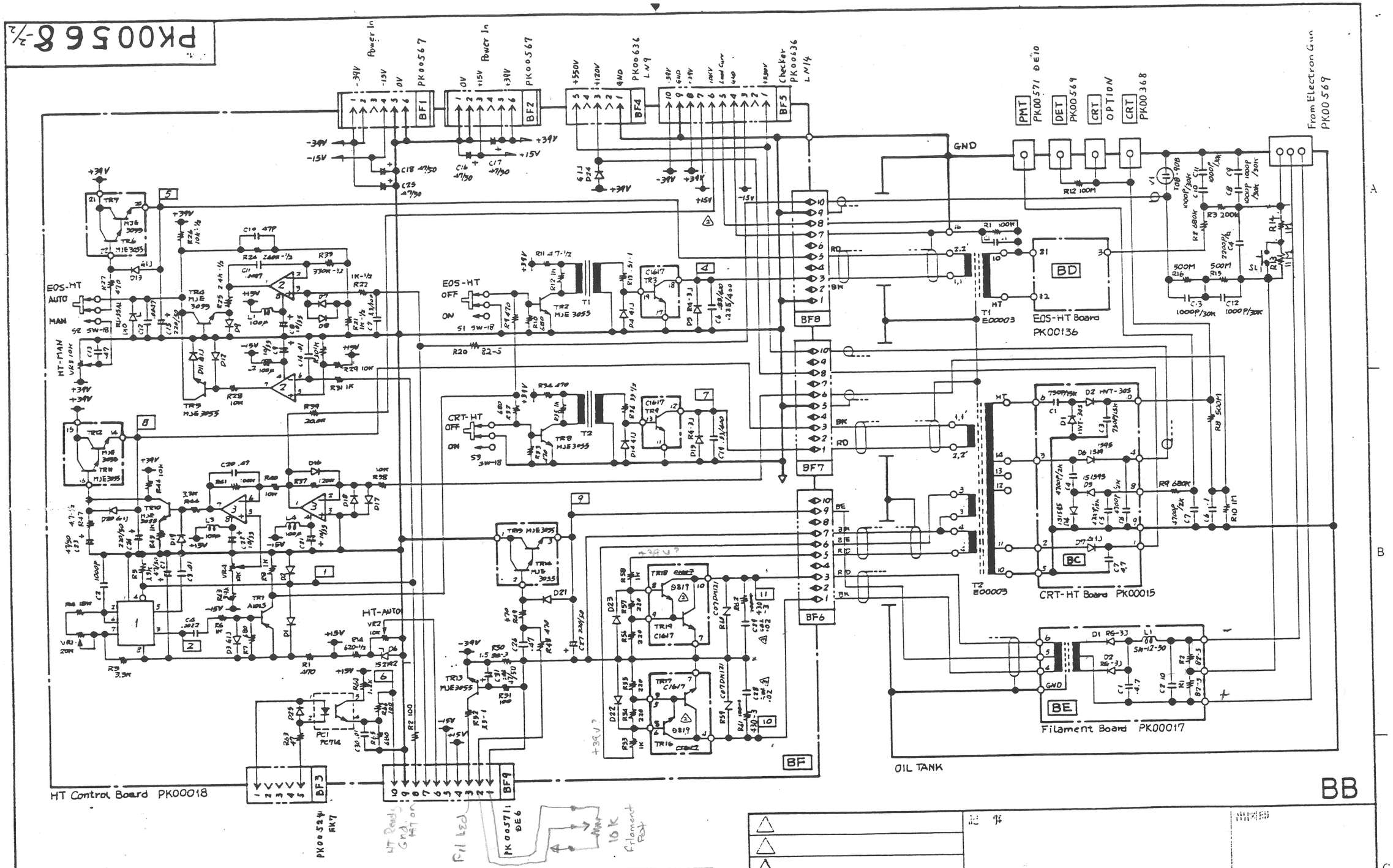

NO.	DEVICE TYPE	DESCRIPTION	SUPPLY V.	+V	-V
3	TL082CT ~~NJM4558H~~ ②		+15V -15V	8	4
2	TL082CT ~~NJM4558H~~ ②	Dual Operation Amplifier	+15V -15V	8	4
1	MC1455P1	Timer	+15V 0V	8	1

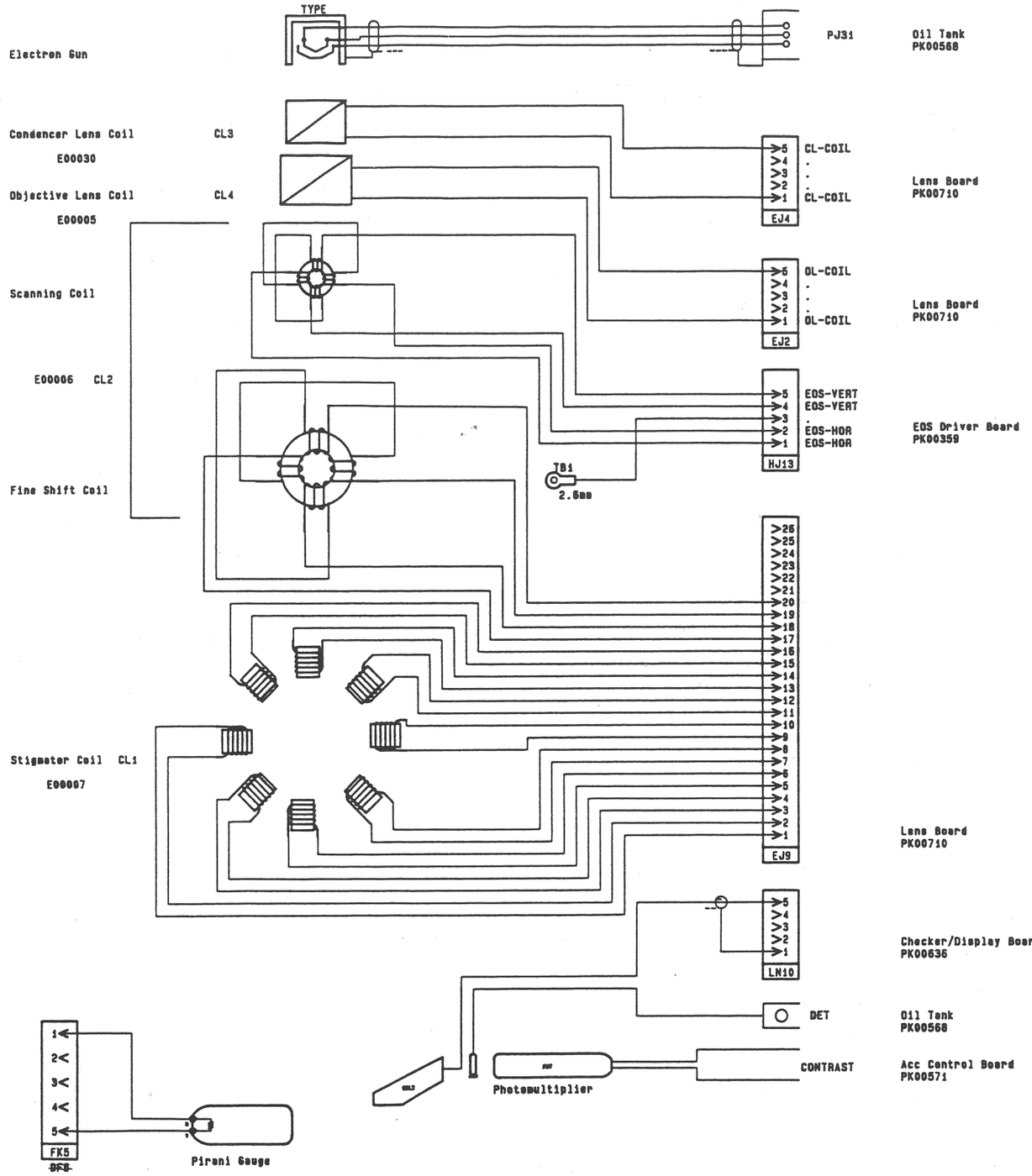

NOTES	DWG.NAME	TITLE			
1. 87/12/14 TS180001 S. 2. 88/06/04 TS180005 S.S 3 4 5	Y.SATOH	Electron Optical S			
	DWG.DATE	MARK	DWG.NO		PAGE
	87/05/10	CC	PK00569		1/1

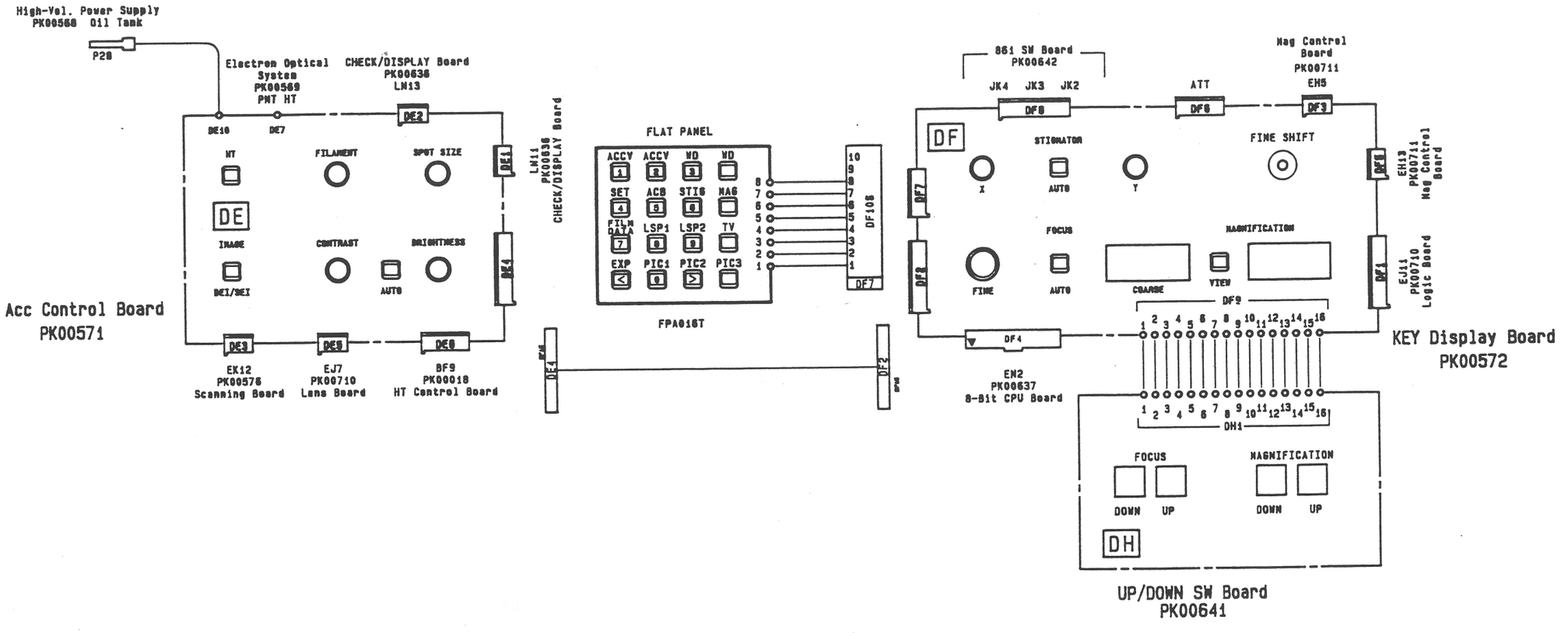

NOTES	DWG.NAME	TITLE			
1. ..... 2. TC020396 3. 87/12/14 TS180001 S. 4 5	S.SUZAKI	Operation Panel			
	DWG.DATE	MARK	DWG.NO	PAGE	
	87/05/20	DD	PK00570	1/1	

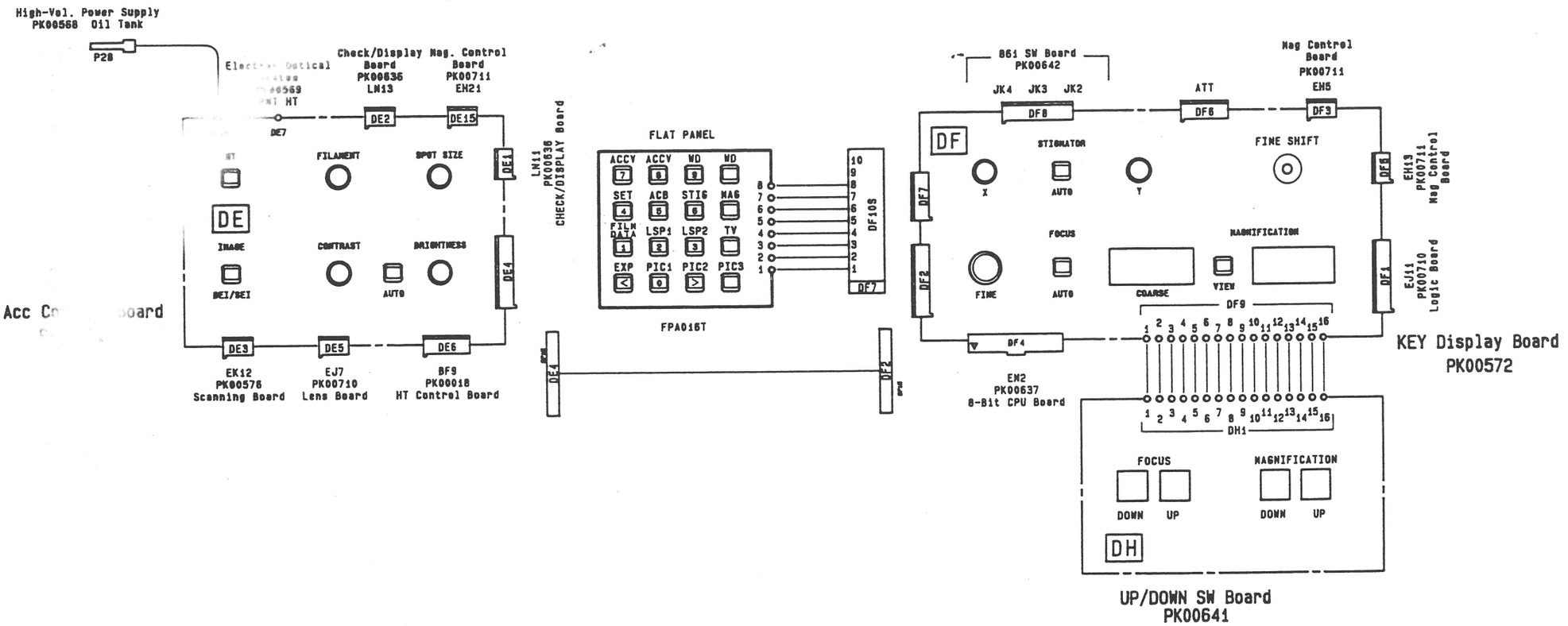

NOTES	DWG.NAME	TITLE			
1. ..... 2. TC020396 3. 87/12/14 TS180001 S. 4. 88/06/04 TS180005 S.S 5	S.SUZAKI	Operation Panel			
	DWG.DATE	MARK	DWG.NO	PAGE	
	87/05/20	DD	PK00570	1/1	

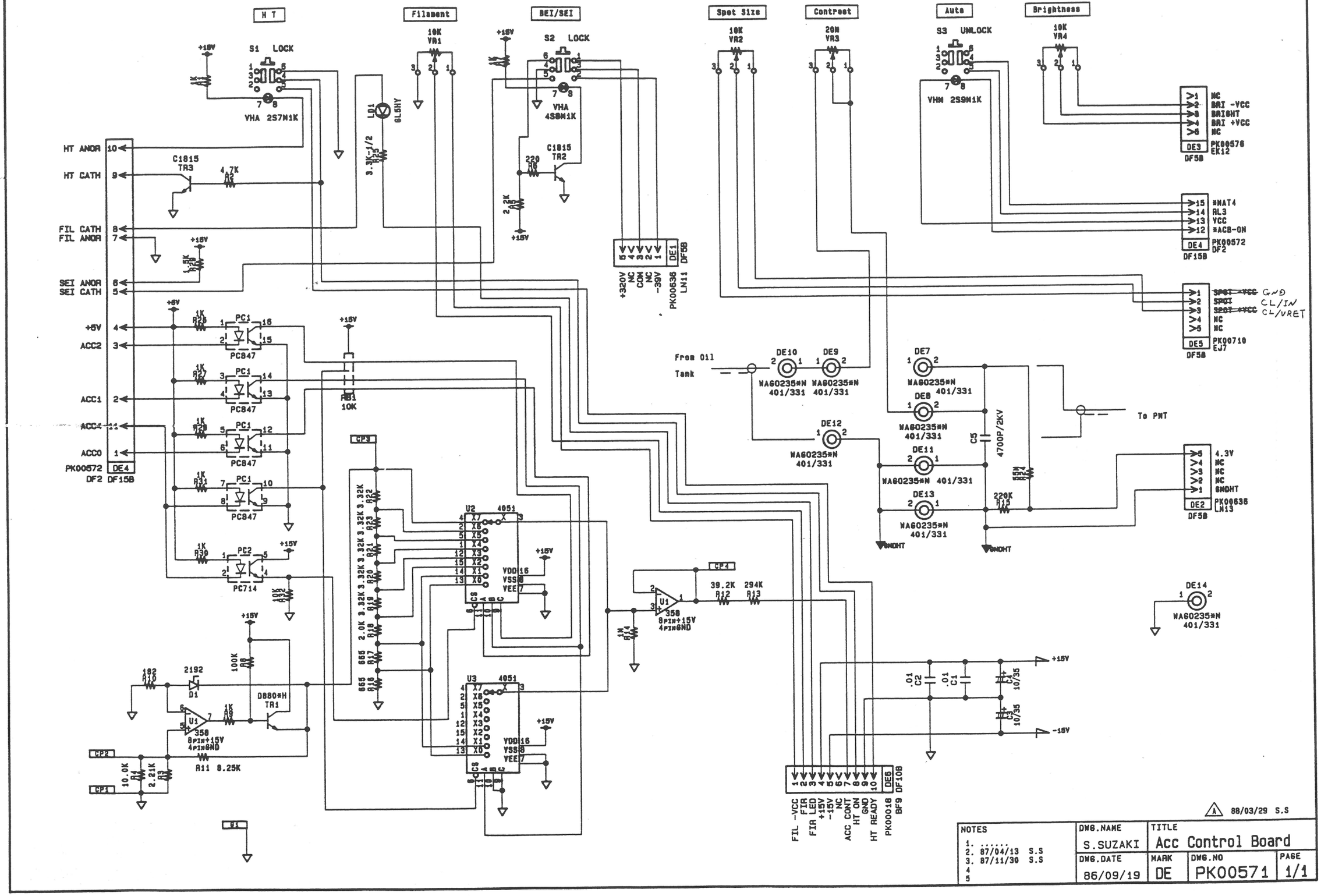
H T
Filament
BEI/SEI
Spot Size
Contrast
Auto
Brightness
S1 LOCK
S2 LOCK
S3 UNLOCK
VHA 2S7M1K
VHA 4S8M1K
VHM 2S9M1K
10K VR1
10K VR2
20M VR3
10K VR4
LD1 GL5HY
3.3K-1/2 R25
C1815 TR3
C1815 TR2
4.7K R26
220 R27
2.2K R28
HT ANOR 10
HT CATH 9
FIL CATH 8
FIL ANOR 7
SEI ANOR 6
SEI CATH 5
+5V 4
ACC2 3
ACC1 2
ACC4 11
ACC0 1
PK00572 DE4
DF2 DF15B
PC847
PC714
1K R29
1K R30
1K R31
1K R32
1K R34
1K R35
1K R36
1K R37
1K R38
1K R39
1K R40
1K R41
1K R42
1K R43
1K R44
1K R45
1K R46
1K R47
1K R48
1K R49
1K R50
1K R51
1K R52
1K R53
1K

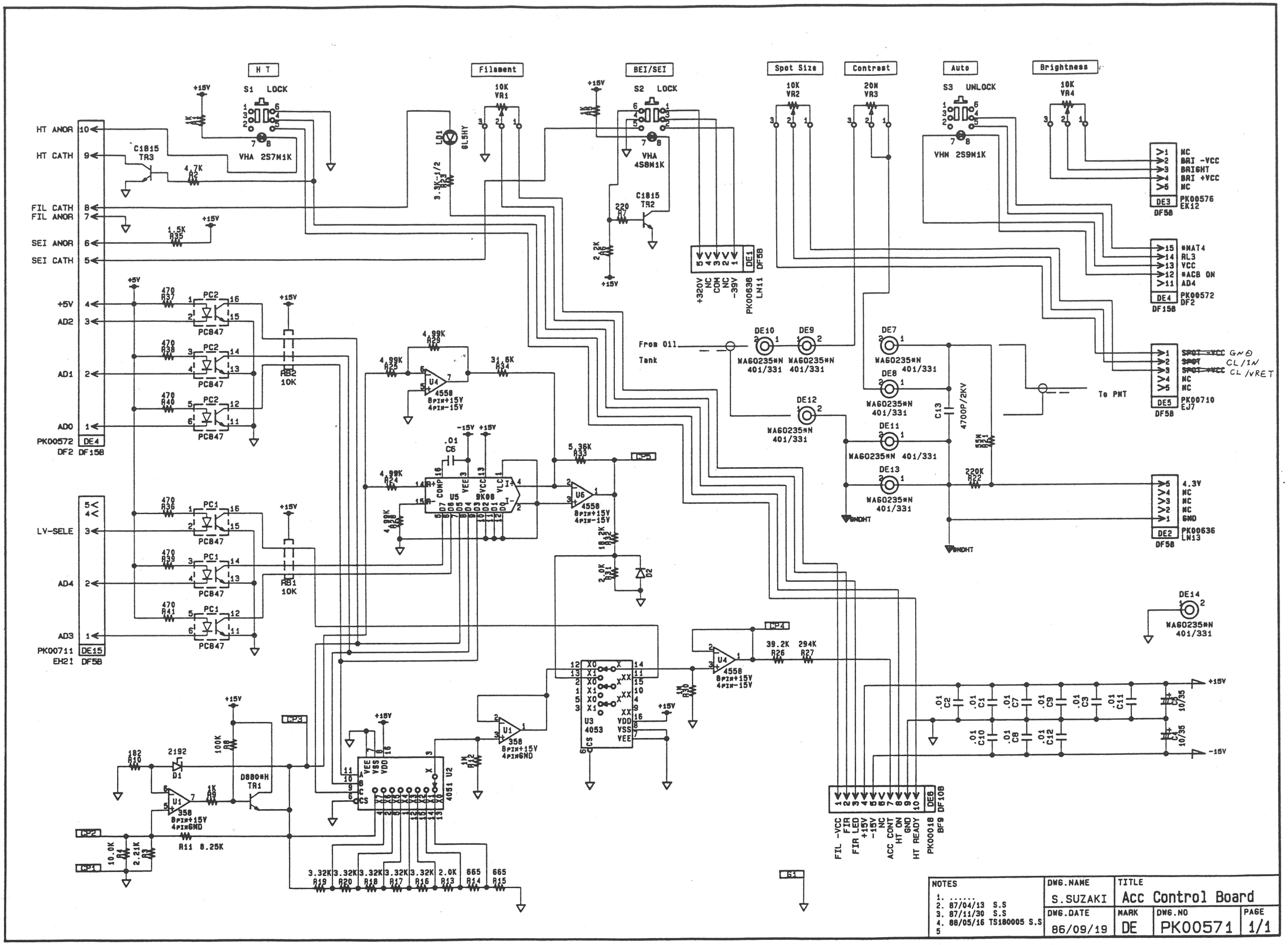
H T
Filament
BEI/SEI
Spot Size
Contrast
Auto
Brightness
S1 LOCK
S2 LOCK
S3 UNLOCK
VHA 2S7M1K
VHA 4S8M1K
VHM 2S9M1K
HT ANOR
HT CATH
FIL CATH
FIL ANOR
SEI ANOR
SEI CATH
+5V
AD2
AD1
AD0
PK00572
DF2 DF15B
LV-SELE
AD4
AD3
PK00711
EH21 DF5B
From Oil
Tank
To PMT
PK00576
EK12
PK00572
DF2
PK00710
EJ7
PK00636
LN13
PK00636
LN11
PK00018
BF9
4558
4053
4051
U2
U3
U4
U5
U6
U1
358
PC847
PC1
PC2
C1815
TR3
C1815
TR2
D880*H
TR1
GND
CL/IN
CL/VRET
4700P/2KV
+15V
-15V
NOTES
1. .....
2. 87/04/13 S.S
3. 87/11/30 S.S
4. 88/05/16 TS180005 S.S
5
DWG.NAME
S.SUZAKI
DWG.DATE
86/09/19
TITLE
Acc Control Board
MARK
DE
DWG.NO
PK00571
PAGE
1/1

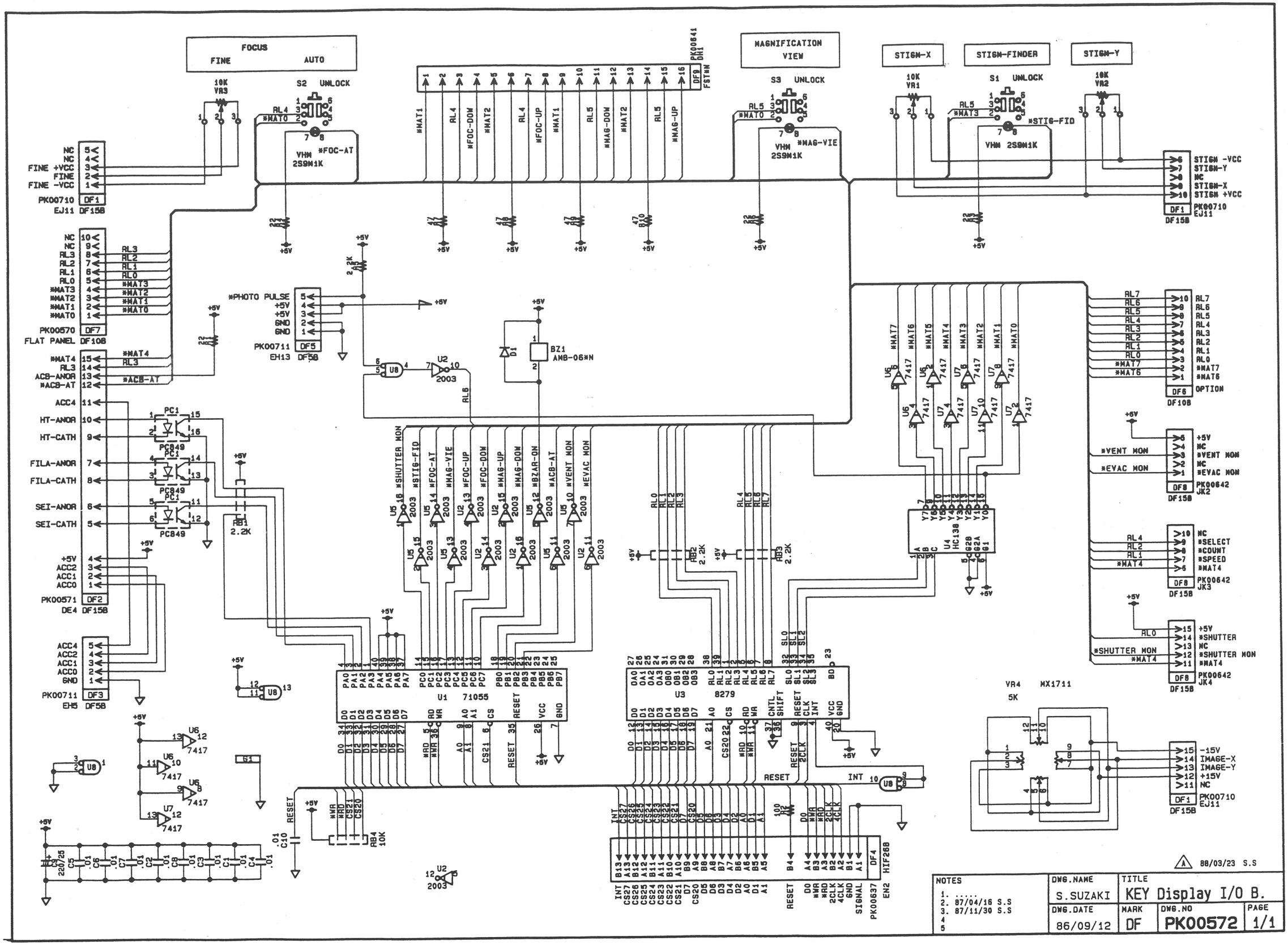
FOCUS
FINE
AUTO
S2 UNLOCK
VHM 2S9M1K
MAGNIFICATION VIEW
S3 UNLOCK
STIGM-X
STIGM-FINDER
S1 UNLOCK
STIGM-Y
PK00710 EJ11 DF15B
PK00570 FLAT PANEL DF10B
PK00711 EH13 DF5B
PK00571 DE4 DF15B
PK00711 EH5 DF5B
PK00637 EN2 HIF26B
PK00641 DH1 FST*N
PK00642 JK2
PK00642 JK3
PK00642 JK4
BZ1 AMB-06*N
U1 71055
U3 8279
U4 HC138
VR4 MX1711 5K
88/03/23 S.S
NOTES
1. .....
2. 87/04/16 S.S
3. 87/11/30 S.S
4
5
DWG.NAME S.SUZAKI
DWG.DATE 86/09/12
TITLE KEY Display I/O B.
MARK DF
DWG.NO PK00572
PAGE 1/1

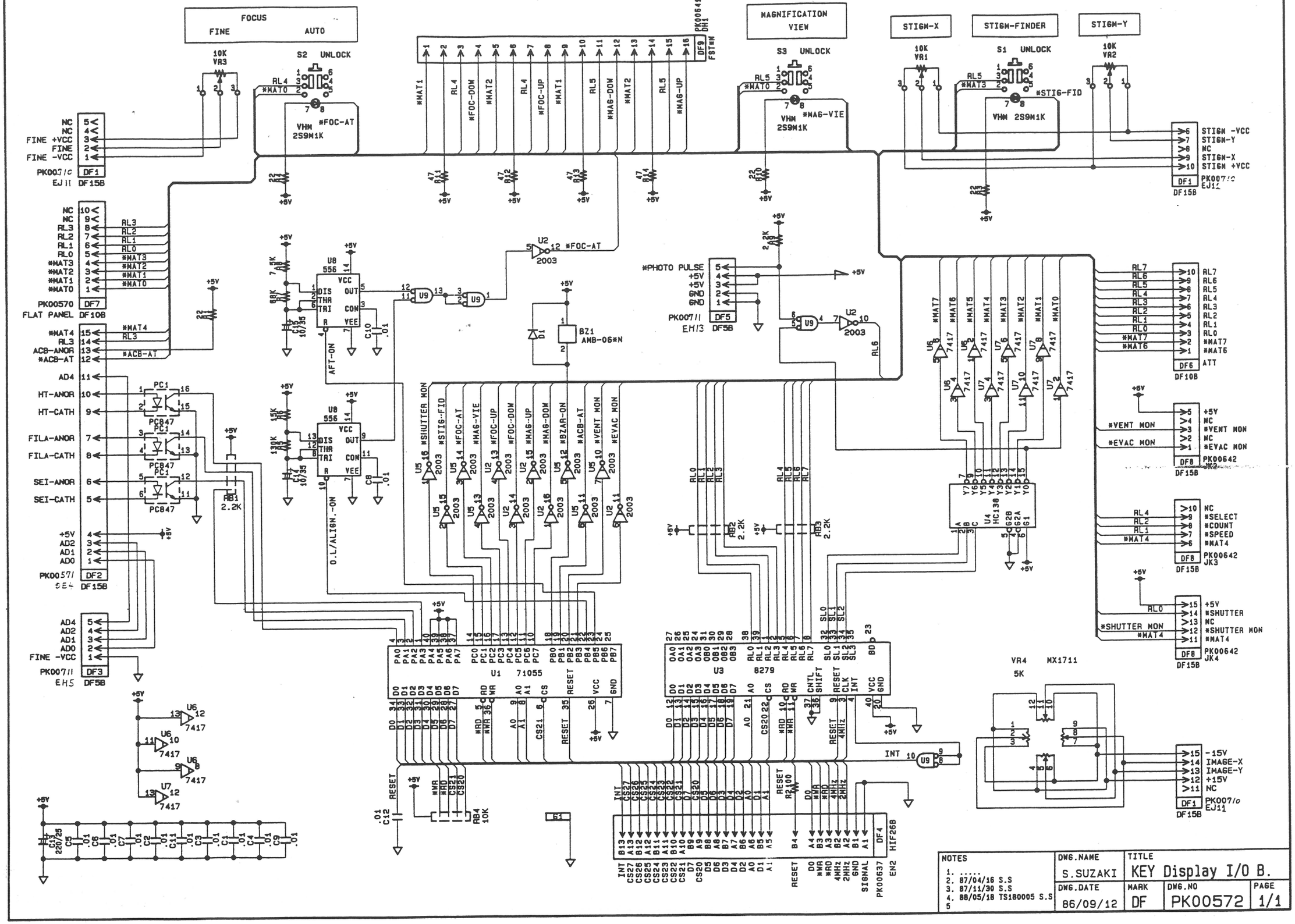
FOCUS
FINE
AUTO
MAGNIFICATION VIEW
STIGM-X
STIGM-FINDER
STIGM-Y
S2 UNLOCK
S3 UNLOCK
S1 UNLOCK
VHM 2S9M1K
U1 71055
U3 8279
U8 556
BZ1 AMB-06*N
VR4 MX1711 5K
PK00571 DF15B
PK00570 FLAT PANEL DF10B
PK00711 EH13 DF5B
PK00711 EH5 DF5B
PK00637 EN2 HIF26B
PK00641 DH1 FGTWN
PK00642 JK3
PK00642 JK4
PK00711 EJ11 DF15B
NOTES
1. .....
2. 87/04/16 S.S
3. 87/11/30 S.S
4. 88/05/18 TS180005 S.S
5
DWG.NAME S.SUZAKI
DWG.DATE 86/09/12
TITLE KEY Display I/O B.
MARK DF
DWG.NO PK00572
PAGE 1/1

PART#

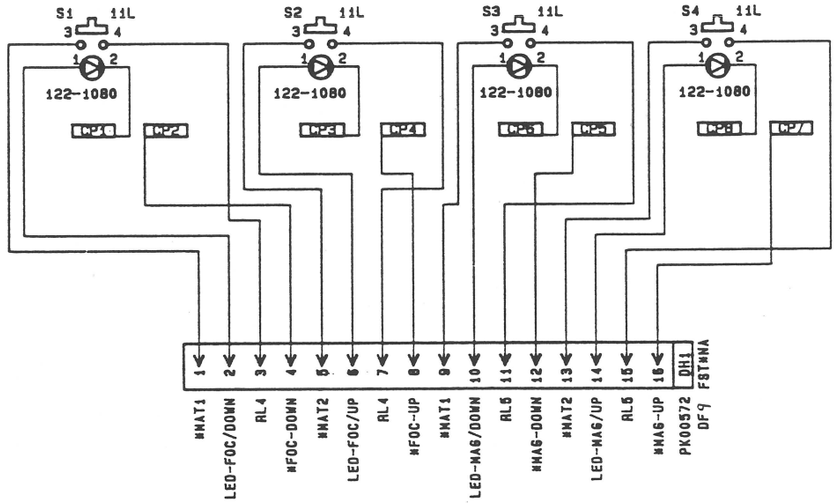

NOTES	DWG.NAME	TITLE		
1 2 3 4 5	S.SUZAKI	UP/DOWN SW Board		
	DWG.DATE	MARK	DWG.NO	PAGE
	87/04/22	DH	PK00641	1/1

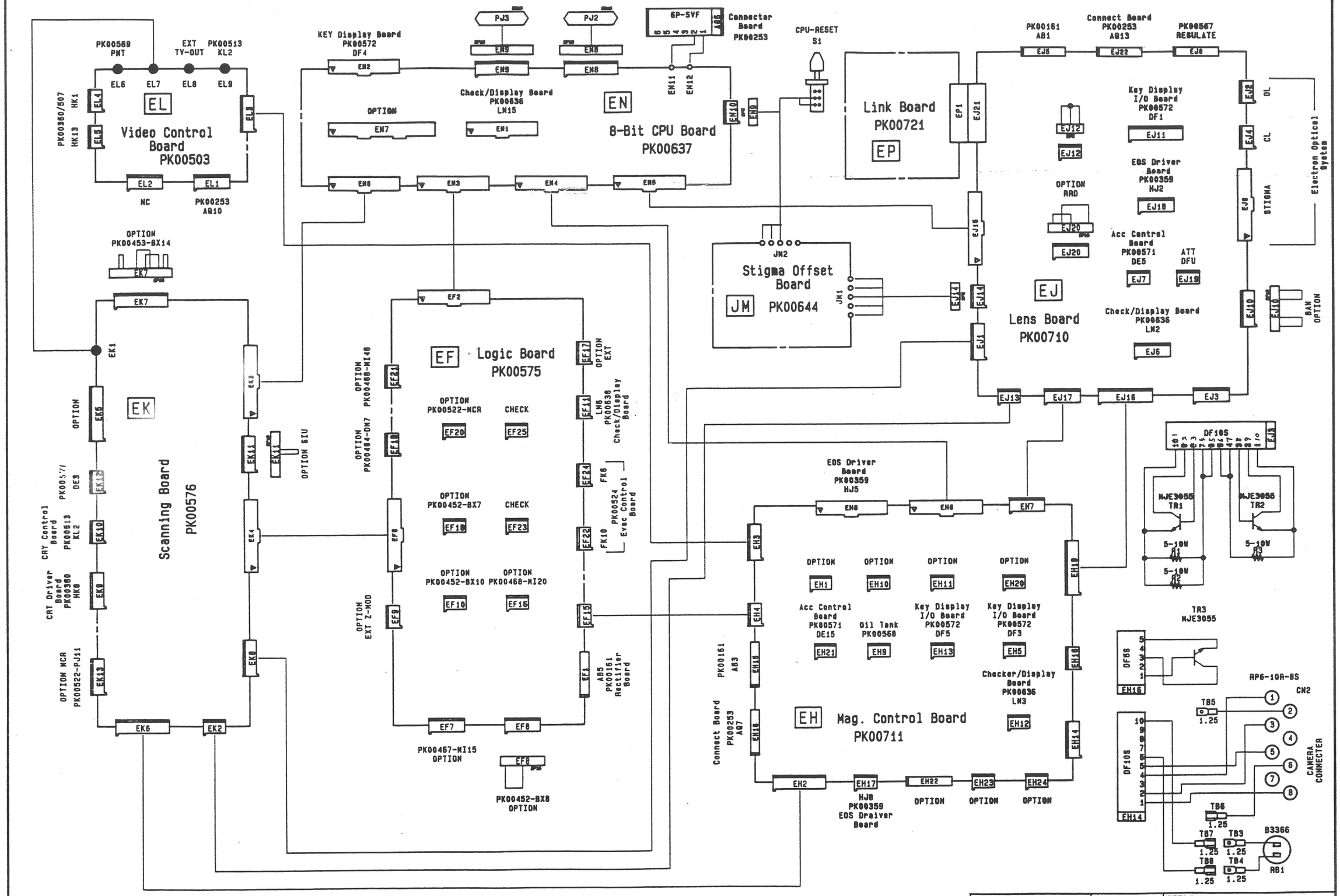

NOTES	DWG.NAME	TITLE
1. ..... 2. TC020396 3. 87/12/15 TS100001 S. 4. 88/06/04 TS100005 S.S 5	S.SUZAKI	Scanning Controller
	DWG.DATE 87/05/20	MARK EE / DWG.NO PK00574 / PAGE 1/1

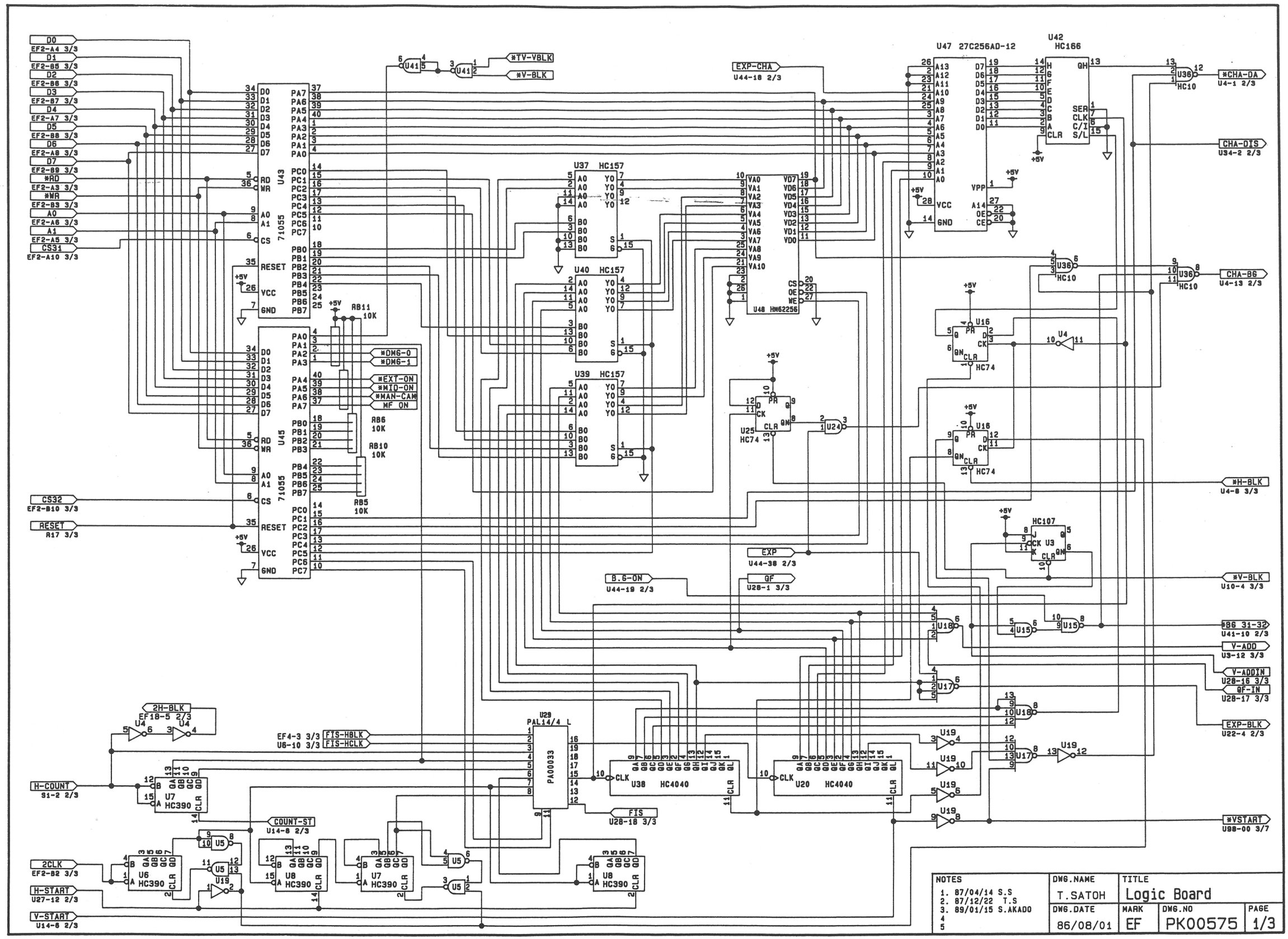

NOTES	DWG.NAME	TITLE		
1. 87/04/14 S.S 2. 87/12/22 T.S 3. 89/01/15 S.AKADO 4 5	T.SATOH	Logic Board		
	DWG.DATE	MARK	DWG.NO	PAGE
	86/08/01	EF	PK00575	1/3

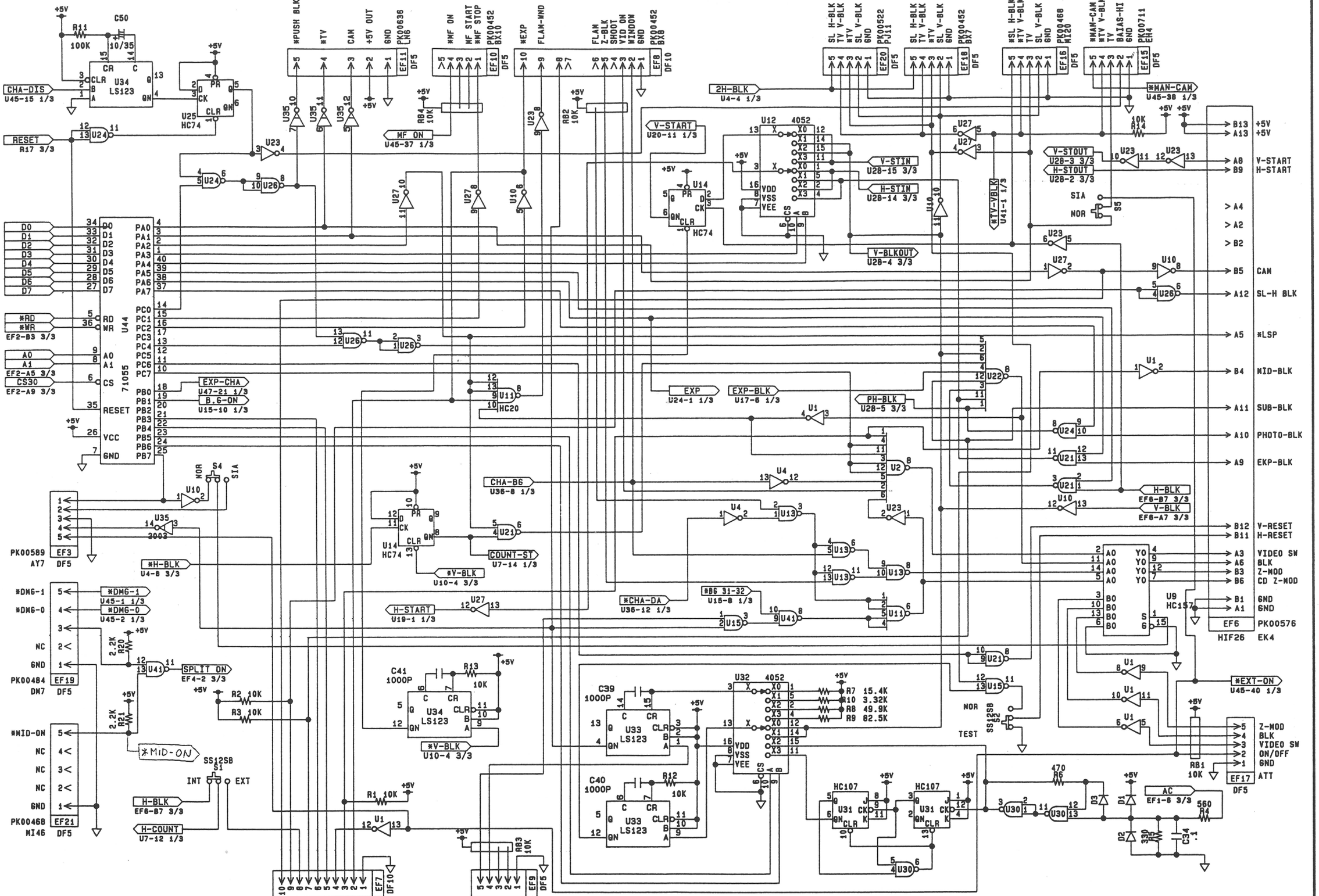

NOTES	DWG.NAME	TITLE			
1. 87/04/14 S.S 2. 87/12/22 T.S 3. 89/01/15 S.A 4 5	T.SATOH	Logic Board			
	DWG.DATE	MARK	DWG.NO	PAGE	
	86/08/12	EF	PK00575	2/3	

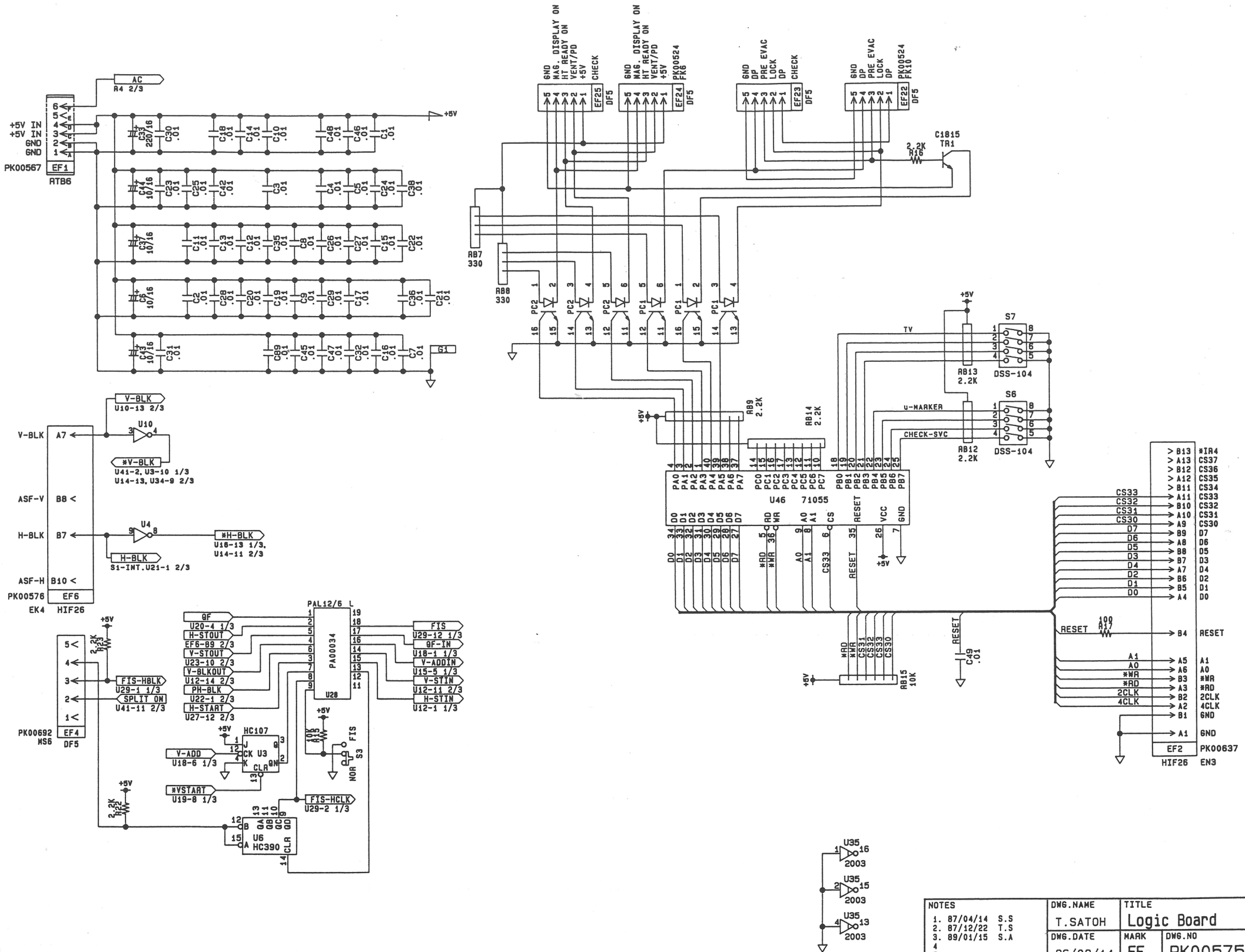
AC
A4 2/3
+5V IN
+5V IN
GND
GND
PK00567
EF1
RTB6
+5V
C33 220/16
C30 .01
C18 .01
C14 .01
C10 .01
C48 .01
C46 .01
C1 .01
C41 10/16
C23 .01
C25 .01
C42 .01
C3 .01
C4 .01
C5 .01
C24 .01
C38 .01
C37 10/16
C11 .01
C13 .01
C12 .01
C35 .01
C8 .01
C26 .01
C27 .01
C15 .01
C22 .01
C6 10/16
C2 .01
C28 .01
C20 .01
C19 .01
C9 .01
C29 .01
C17 .01
C36 .01
C21 .01
C43 10/16
C31 .01
C89 .01
C45 .01
C47 .01
C32 .01
C16 .01
C7 .01
G1
V-BLK
U10-13 2/3
U10
V-BLK
A7
*V-BLK
U41-2, U3-10 1/3
U14-13, U34-9 2/3
ASF-V
B8
H-BLK
B7
U4
*H-BLK
U16-13 1/3,
U14-11 2/3
H-BLK
S1-INT.U21-1 2/3
ASF-H
B10
PK00576
EF6
EK4
HIF26
PAL12/6 L
PA00034
U28
QF
U20-4 1/3
H-STOUT
EF6-B9 2/3
V-STOUT
U23-10 2/3
V-BLKOUT
U12-14 2/3
PH-BLK
U22-1 2/3
H-START
U27-12 2/3
FIS
U29-12 1/3
QF-IN
U18-1 1/3
V-ADDIN
U15-5 1/3
V-STIN
U12-11 2/3
H-STIN
U12-1 1/3
FIS-HBLK
U29-1 1/3
SPLIT ON
U41-11 2/3
PK00692
MS6
EF4
DF5
HC107
V-ADD
U18-6 1/3
*VSTART
U19-8 1/3
U6
HC390
FIS-HCLK
U29-2 1/3
NOR
S3
GND
MAG. DISPLAY ON
HT READY ON
VENT/PD
+5V
CHECK
EF25
DF5
PK00524
FK6
EF24
DP
PRE EVAC
LOCK
EF23
FK10
EF22
C1815
TR1
2.2K
R16
RB7
330
RB8
330
PC2
PC1
RB9
2.2K
RB14
2.2K
U46
71055
PA0
PA1
PA2
PA3
PA4
PA5
PA6
PA7
PC0
PC1
PC2
PC3
PC4
PC5
PC6
PC7
PB0
PB1
PB2
PB3
PB4
PB5
PB6
PB7
D0
D1
D2
D3
D4
D5
D6
D7
RD
WR
A0
A1
CS
RESET
VCC
GND
CS33
RESET
TV
u-MARKER
CHECK-SVC
RB13
2.2K
RB12
2.2K
S7
S6
DSS-104
RB15
10K
C49
.01
U35
2003
> B13 *IR4
> A13 CS37
> B12 CS36
> A12 CS35
> B11 CS34
A11 CS33
B10 CS32
A10 CS31
A9 CS30
B9 D7
A8 D6
B8 D5
B7 D3
A7 D4
B6 D2
B5 D1
A4 D0
100
A17
B4 RESET
A5 A1
A6 A0
B3 *WR
A3 *RD
B2 2CLK
A2 4CLK
B1 GND
A1 GND
EF2
PK00637
EN3
NOTES
1. 87/04/14 S.S
2. 87/12/22 T.S
3. 89/01/15 S.A
4
5
DWG.NAME
T.SATOH
DWG.DATE
86/08/14
TITLE
Logic Board
MARK
EF
DWG.NO
PK00575
PAGE
3/3

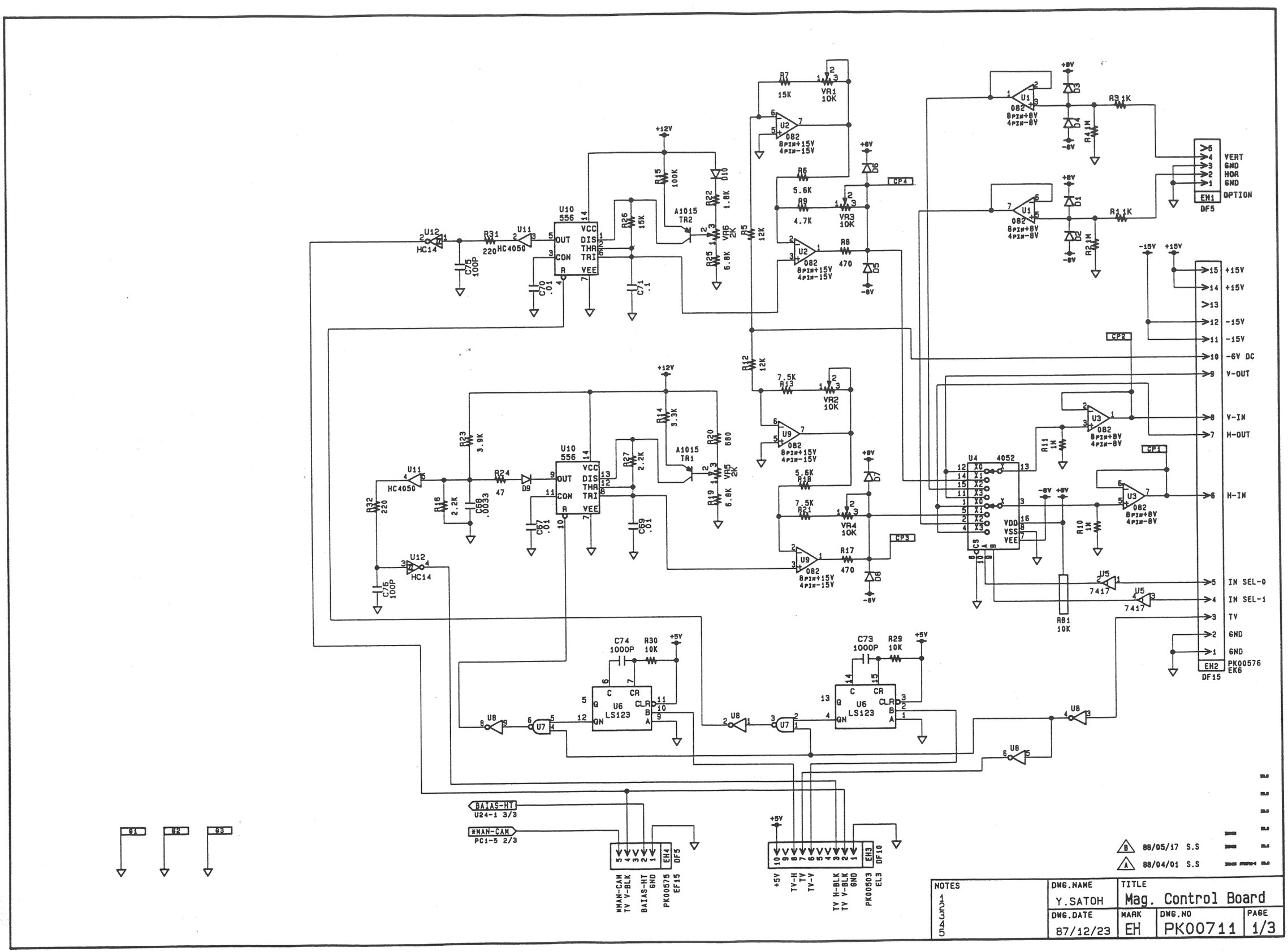

VERT
GND
HOR
GND
OPTION
EH1
DF5
+15V
+15V
-15V
-15V
-6V DC
V-OUT
V-IN
H-OUT
H-IN
IN SEL-0
IN SEL-1
TV
GND
GND
EH2
PK00576
EK6
DF15
BAIAS-HT
U24-1 3/3
*MAN-CAM
PC1-5 2/3
EH4
DF5
*MAN-CAM
TV V-BLK
BAIAS-HT
GND
PK00575
EF15
EH3
DF10
+5V
TV-H
TV
TV-V
TV H-BLK
TV V-BLK
GND
PK00503
EL3
88/05/17 S.S
88/04/01 S.S
NOTES
1
2
3
4
5
DWG.NAME
Y.SATOH
DWG.DATE
87/12/23
TITLE
Mag. Control Board
MARK
EH
DWG.NO
PK00711
PAGE
1/3

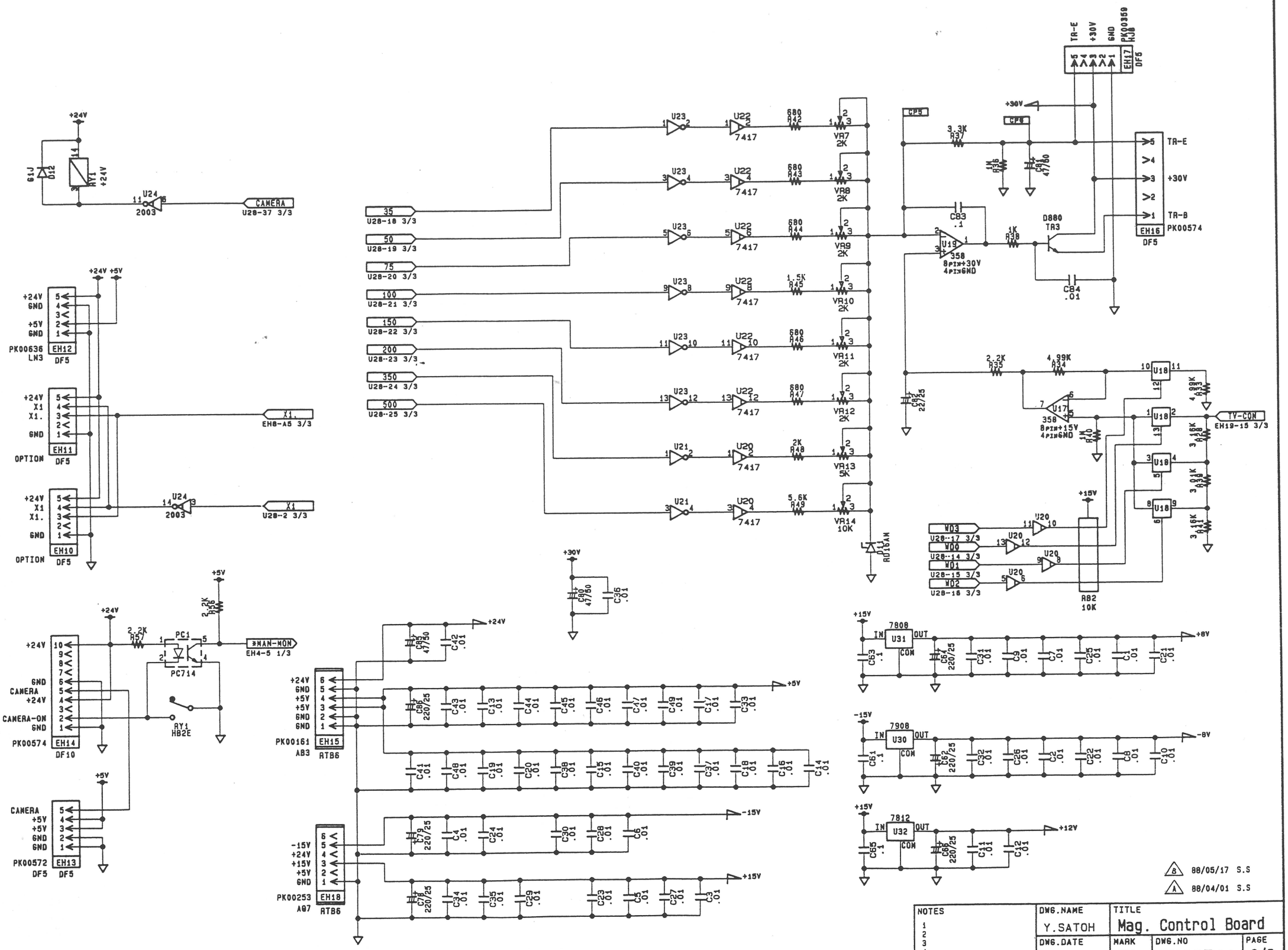
+24V
61J D12
RY1 +24V
U24 2003
CAMERA U28-37 3/3
+24V +5V
PK00636 LN3 EH12 DF5
OPTION EH11 DF5
X1. EH8-A5 3/3
OPTION EH10 DF5
X1 U28-2 3/3
PK00572 DF5 EH13 DF5
CAMERA-ON
PC1 PC714
2.2K R57
*MAN-MON EH4-5 1/3
RY1 HB2E
PK00574 EH14 DF10
PK00161 AB3 ATB6 EH15
PK00253 AQ7 ATB6 EH18
35 U28-18 3/3
50 U28-19 3/3
75 U28-20 3/3
100 U28-21 3/3
150 U28-22 3/3
200 U28-23 3/3
350 U28-24 3/3
500 U28-25 3/3
U22 7417
680 R42
VR7 2K
VR8 2K
VR9 2K
1.5K R45
VR10 2K
680 R46
VR11 2K
680 R47
VR12 2K
2K R48
VR13 5K
5.6K R49
VR14 10K
RD16AM
U20 7417
U21
+30V
C80 47/50
C36 .01
C42 .01
C58 47/50
C43 .01
C13 .01
C44 .01
C45 .01
C46 .01
C47 .01
C49 .01
C17 .01
C33 .01
C59 220/25
C41 .01
C48 .01
C19 .01
C20 .01
C38 .01
C15 .01
C40 .01
C39 .01
C37 .01
C18 .01
C16 .01
C14 .01
C79 220/25
C4 .01
C24 .01
C30 .01
C28 .01
C6 .01
C78 220/25
C34 .01
C35 .01
C29 .01
C23 .01
C5 .01
C27 .01
C3 .01
TR-E +30V GND PK00359 RJ8 EH17 DF5
GP5
GP6
3.3K R37
1M R36
47/50 C81
C83 .1
D880 TR3
U19 358 8PIN+30V 4PIN GND
1K R38
C84 .01
TR-E
+30V
TR-B
EH16 PK00574 DF5
2.2K R35
4.99K R34
C82 22/25
U17 358 8PIN+15V 4PIN GND
1M R10
TV-CON EH19-15 3/3
4.99K R33
3.16K R28
3.01K R31
3.16K R41
+15V
WD3 U28-17 3/3
WD0 U28-14 3/3
WD1 U28-15 3/3
WD2 U28-16 3/3
RB2 10K
7808 U31
7908 U30
7812 U32
IN OUT COM
C63 .1
C64 220/25
C31 .01
C9 .01
C7 .01
C25 .01
C1 .01
C21 .01
+8V
C61 .1
C62 220/25
C32 .01
C26 .01
C2 .01
C22 .01
C8 .01
C10 .01
-8V
C65 .1
C66 220/25
C11 .01
C12 .01
+12V
88/05/17 S.S
88/04/01 S.S
NOTES
1
2
3
4
5
DWG.NAME Y.SATOH
TITLE Mag. Control Board
DWG.DATE 87/12/23
MARK EH
DWG.NO PK00711
PAGE 2/3

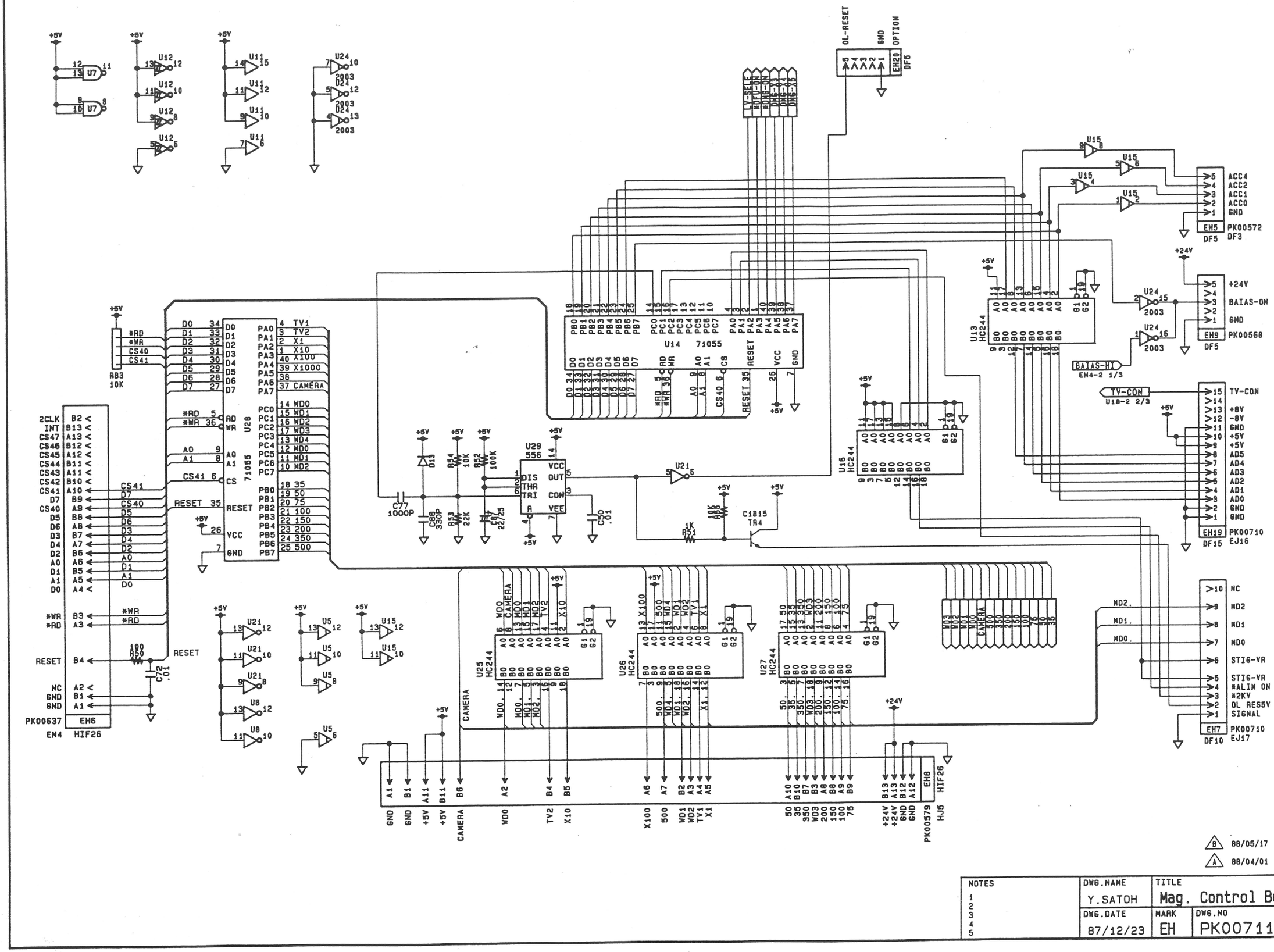

NOTES	DWG.NAME	TITLE
1	Y.SATOH	Mag. Control Board
2		
3	DWG.DATE	MARK / DWG.NO / PAGE
4	87/12/23	EH / PK00711 / 3/3
5		

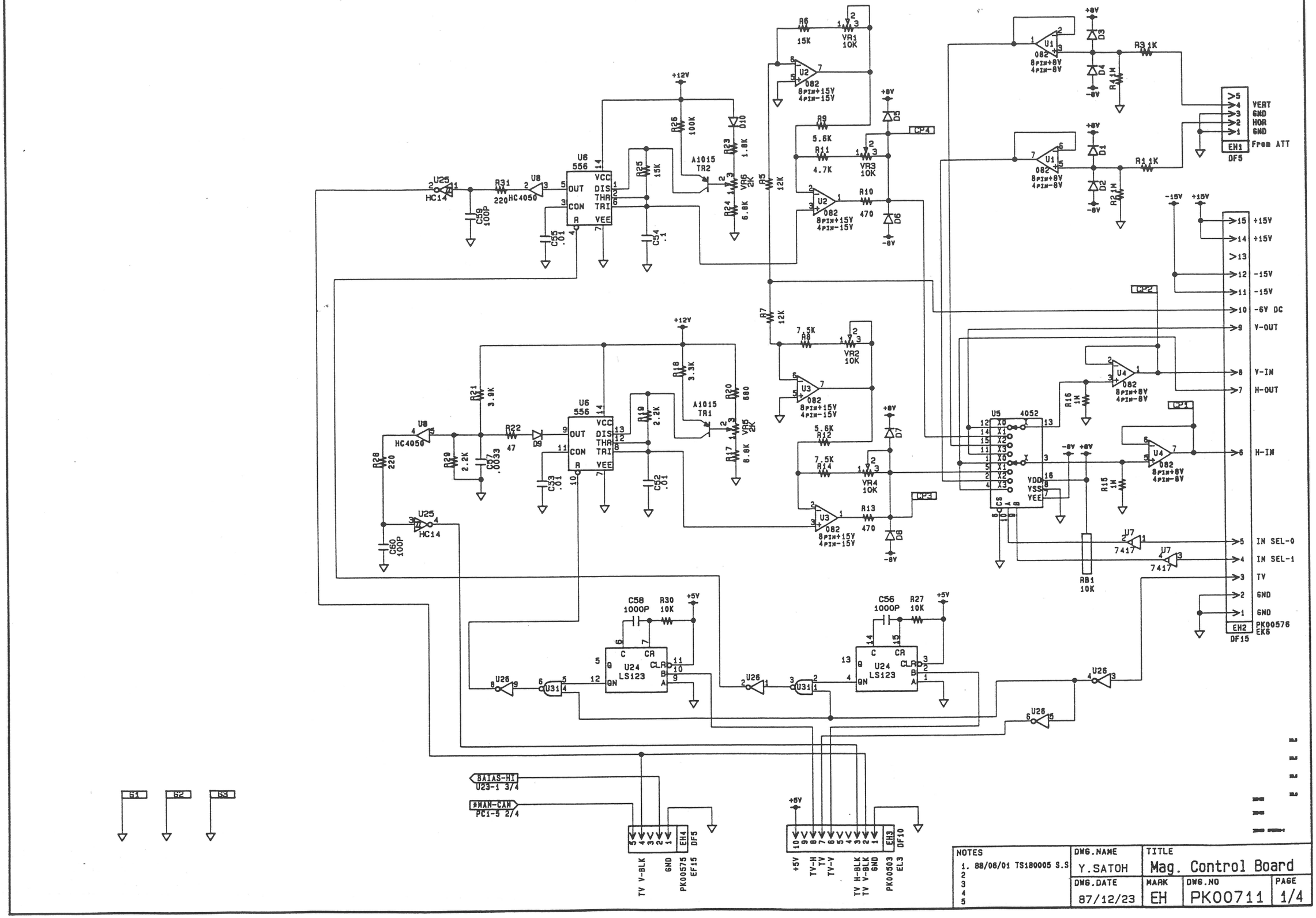

NOTES	DWG.NAME	TITLE
1. 88/06/01 TS180005 S.S 2 3 4 5	Y.SATOH	Mag. Control Board
	DWG.DATE: 87/12/23	MARK: EH · DWG.NO: PK00711 · PAGE: 1/4

+24V
61J D16
RY1 +24V
U23 11 14 2003 6
CAMERA U34-37 3/4

+24V +5V
+24V GND 5 4 3 2 1 +5V GND
PK00636 LN3 EH12 DF5

+24V X1 5 4 3 2 1 GND
ATT EH11 DF5
X1 U29-12 3/4

+24V X1 5 4 3 2 1 GND
ATT EH10 DF5
U23 14 3 2003
X1 U34-2 3/4

+24V
+24V 10 9 8 7 6 GND
CAMERA 5
+24V 4
3
CAMERA-ON 2
GND 1
PK00574 EH14 DF10
R103 2.2K
PC1
PC714
R102 2.2K
+5V
RY1 HB2E
#MAN-CAM EH4-5 1/4

+5V
CAMERA 5
+5V 4
+5V 3
GND 2
GND 1
PK00572 EH13
DF5 DF5

35 U34-18 3/4
50 U34-19 3/4
75 U34-20 3/4
100 U34-21 3/4
150 U34-22 3/4
200 U34-23 3/4
350 U34-24 3/4
500 U34-25 3/4

U20 U18 7417 680 R85 VR7 2K
U20 U18 7417 680 R86 VR8 2K
U20 U18 7417 680 R87 VR9 2K
U20 U18 7417 1.5K R88 VR10 2K
U20 U18 7417 680 R89 VR11 2K
U20 U18 7417 680 R90 VR12 2K
U19 U17 7417 2K R91 VR13 5K
U19 U17 7417 5.6K R92 VR14 10K
D14 RD10AM

+30V
C74 47/50
C31 .01

+24V
C77 47/50
C32 .01
C75 220/25
C35 .01
C13 .01
C37 .01
C38 .01
C39 .01
C45 .01
C43 .01
C40 .01
C15 .01
C30 .01
C42 .01
C41 .01
C44 .01
C27 .01
C33 .01
C29 .01
C28 .01
C26 .01
C36 .01
C34 .01
C14 .01
C62 220/25
C4 .01
C18 .01
C6 .01
C64 220/25
C24 .01
C25 .01
C17 .01
C20 .01
C5 .01
C16 .01
C3 .01
C23 .01
C22 .01
C19 .01
C21 .01

+5V
+24V GND 6 5 4 3 2 1 +5V +5V GND GND
PK00161 AB3 EH15 RTB6

-15V +24V +15V +5V GND 6 5 4 3 2 1
PK00253 AQ7 EH18 RTB6

+5V
C74 47/50
C31 .01

TR-E +30V GND PK00359 RJ8
EH17 DF5

+30V
C71 .1
3.3K R93
1M R94
47/50 C74
D880 TR5
1K R95
U22 358 8PIN+30V 4PINGND
C73 .01
5 TR-E
4 V
3 +30V
2 V
1 TR-B
EH16 PK00574/PK00864 DF5

2.2K R79
4.99K R78
U15 358 8PIN+15V 4PINGND
10K R10
U16 10 11 12 13 1 2 3 4 5 6 8 9
4.99K R81
4.99K R82
3.48K R83
3.48K R84
TV-CON EH19-15 3/4

+15V
WD3 U34-17 3/4
WD0 U34-14 3/4
WD1 U34-15 3/4
WD2 U34-16 3/4
U17 11 10 13 12 9 8 5 6
RB4 10K

+15V
7808 U39 IN OUT COM
C48 .1
C49 220/25
C10 .01
C7 .01
C1 .01
+8V

-15V
7908 U38 IN OUT COM
C46 .1
C47 220/25
C2 .01
C8 .01
C11 .01
-8V

+15V
7812 U40 IN OUT COM
C50 .1
C51 220/25
C12 .01
C9 .01
+12V

NOTES	DWG.NAME	TITLE
1. 88/06/01 TS180005 S.S 2 3 4 5	Y.SATOH	Mag. Control Board
	DWG.DATE	MARK / DWG.NO / PAGE
	87/12/23	EH / PK00711 / 2/4

NOTES	DWG.NAME	TITLE		
1. 88/06/01 TS180005 S.S	Y.SATOH	Mag. Control Board		
2				
3	DWG.DATE	MARK	DWG.NO	PAGE
4	87/12/23	EH	PK00711	3/4
5				

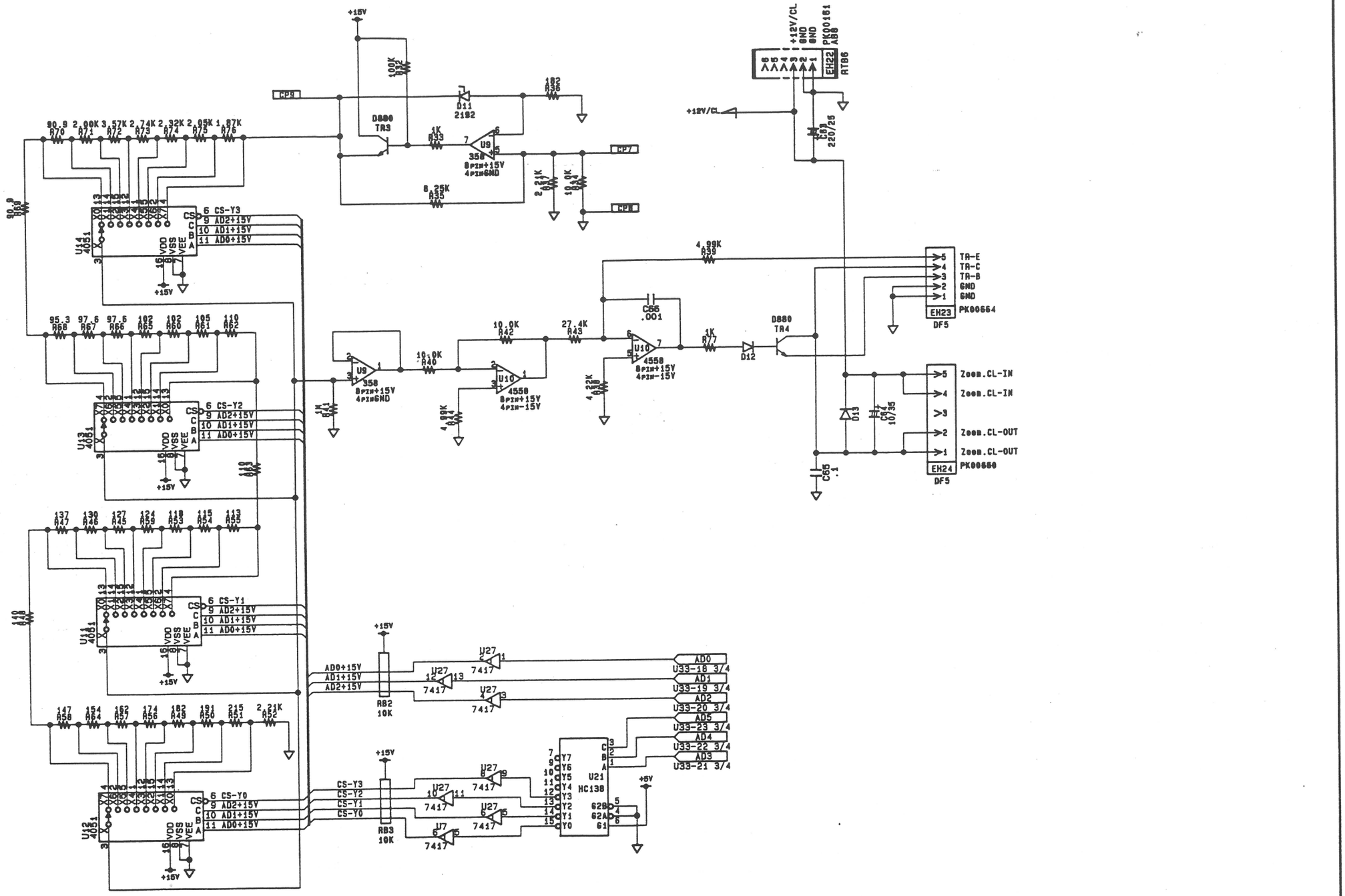

NOTES	DWG.NAME	TITLE			
1. 88/06/01 TS180005 S.S 2 3 4 5	S.SUZAKI	Mag. Control Board			
	DWG.DATE	MARK	DWG.NO		PAGE
	87/12/23	EH	PK00711		4/4

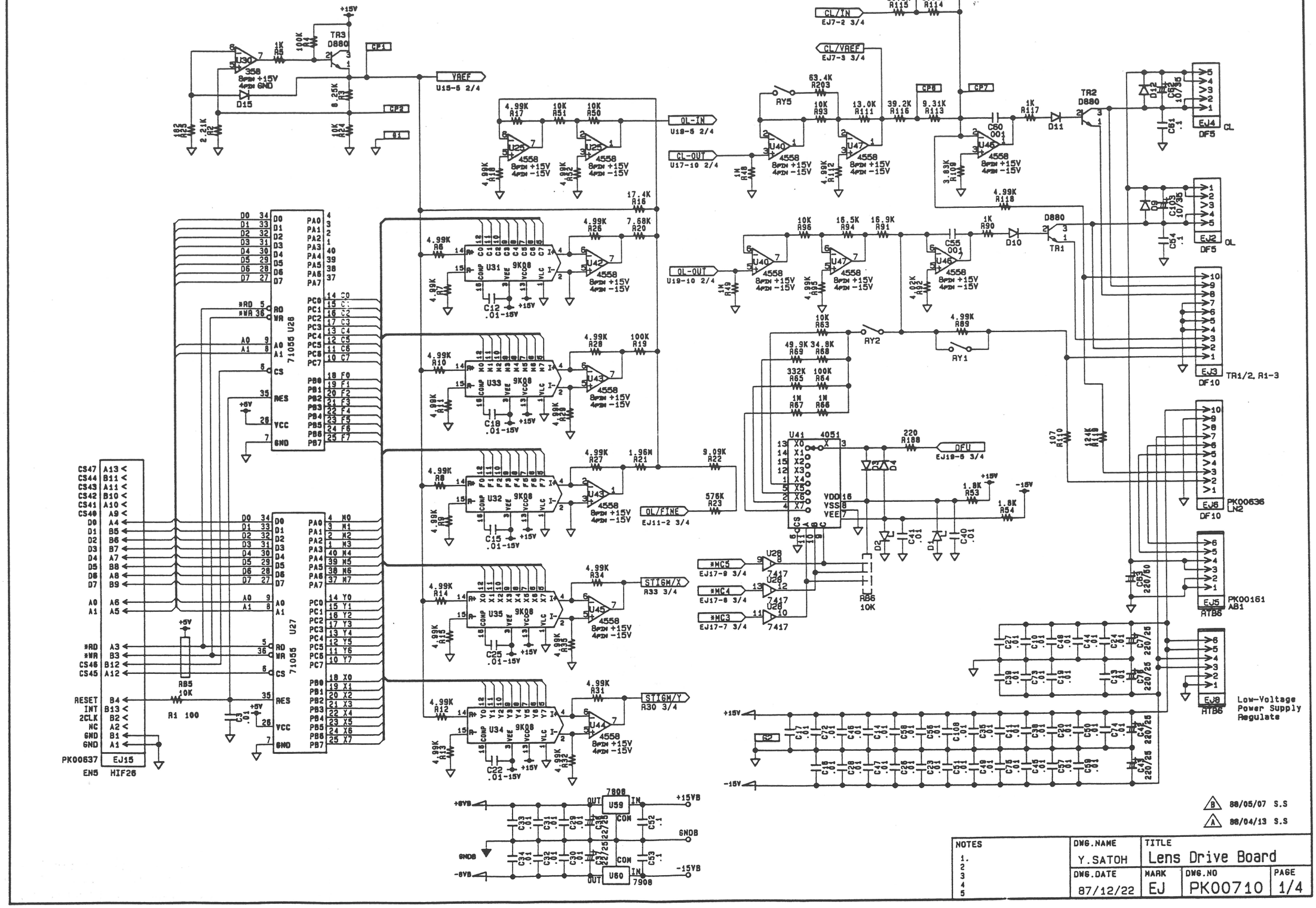
VREF
U15-5 2/4
CL-IN
U18-5 2/4
CL-OUT
U17-10 2/4
OL-IN
U18-5 2/4
OL-OUT
U19-10 2/4
CL/IN
EJ7-2 3/4
CL/VREF
EJ7-3 3/4
QL/FINE
EJ11-2 3/4
STIGM/X
R33 3/4
STIGM/Y
R30 3/4
DFU
EJ19-5 3/4
*MC5
EJ17-9 3/4
*MC4
EJ17-8 3/4
*MC3
EJ17-7 3/4
TR1/2, R1-3
Low-Voltage
Power Supply
Regulate
PK00637
EJ15
HIF26
EN5
PK00636
N2
PK00161
AB1
B 88/05/07 S.S
A 88/04/13 S.S
NOTES
1.
2
3
4
5
DWG.NAME
Y.SATOH
TITLE
Lens Drive Board
DWG.DATE
87/12/22
MARK
EJ
DWG.NO
PK00710
PAGE
1/4

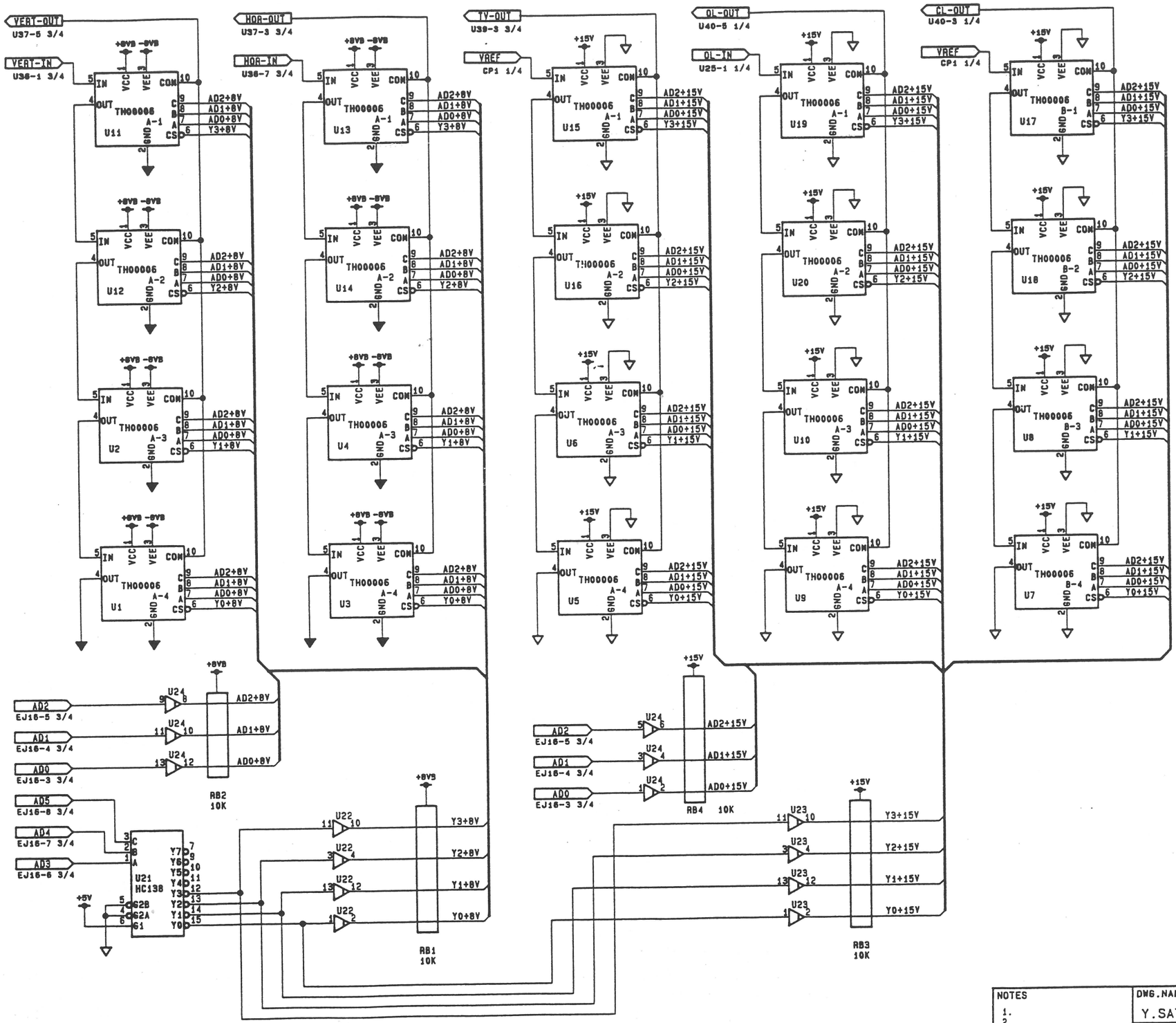
VERT-OUT
U37-5 3/4
VERT-IN
U36-1 3/4
HOR-OUT
U37-3 3/4
HOR-IN
U36-7 3/4
TV-OUT
U39-3 3/4
VREF
CP1 1/4
OL-OUT
U40-5 1/4
OL-IN
U25-1 1/4
CL-OUT
U40-3 1/4
VREF
CP1 1/4
+8VB -8VB
+15V
TH00006
U11
U12
U2
U1
U13
U14
U4
U3
U15
U16
U6
U5
U19
U20
U10
U9
U17
U18
U8
U7
AD2+8V
AD1+8V
AD0+8V
Y3+8V
Y2+8V
Y1+8V
Y0+8V
AD2+15V
AD1+15V
AD0+15V
Y3+15V
Y2+15V
Y1+15V
Y0+15V
AD2
EJ16-5 3/4
AD1
EJ16-4 3/4
AD0
EJ16-3 3/4
AD5
EJ16-8 3/4
AD4
EJ16-7 3/4
AD3
EJ16-6 3/4
U24
U22
U23
RB2
10K
RB1
10K
RB4
10K
RB3
10K
U21
HC138
+5V
B 88/05/07 S.S
A 88/03/23 S.S
NOTES
1.
2
3
4
5
DWG.NAME
Y.SATOH
DWG.DATE
87/12/22
TITLE
Lens Drive Board
MARK
EJ
DWG.NO
PK00710
PAGE
2/4

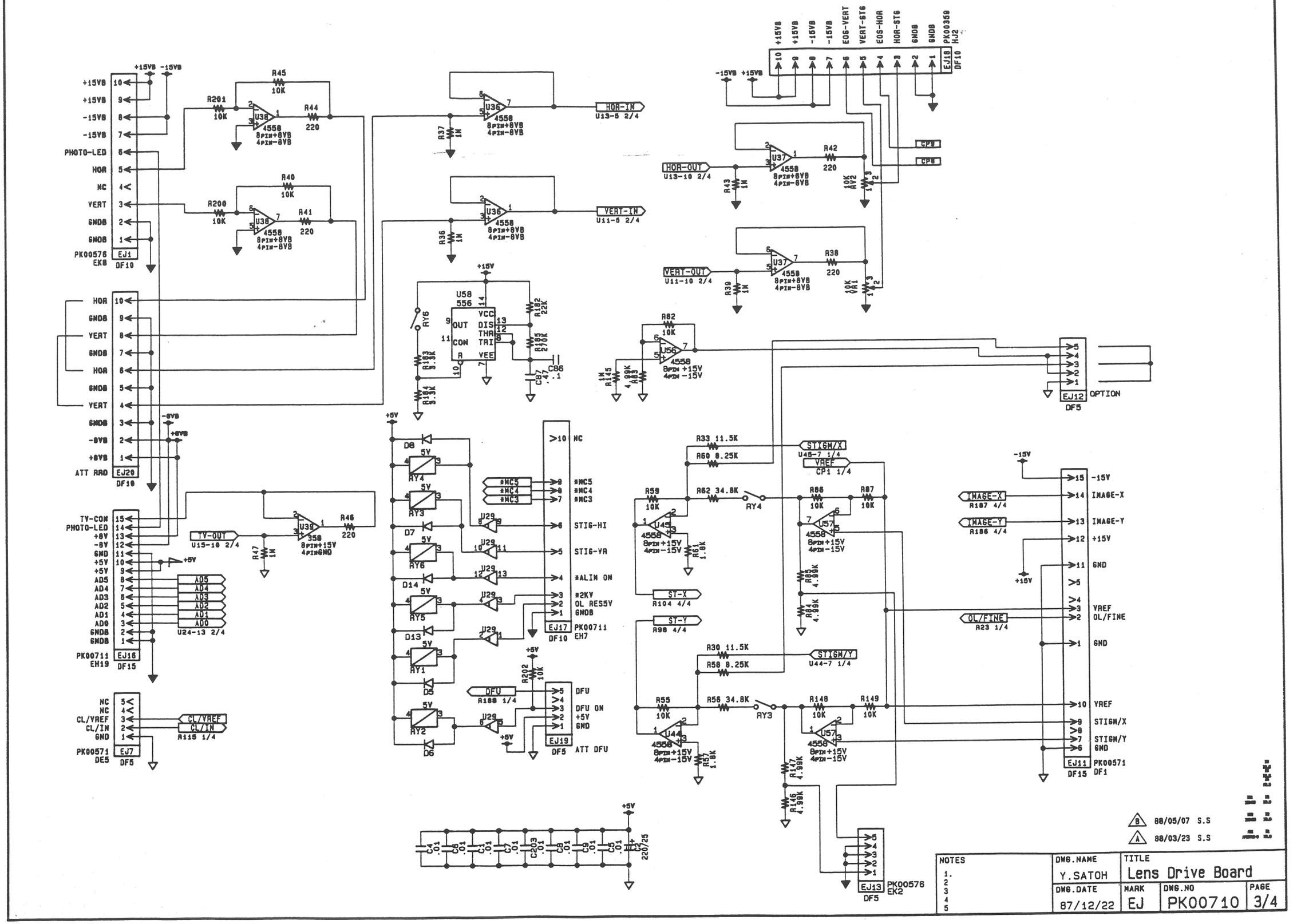
+15VB -15VB
PHOTO-LED
HOR
NC
VERT
GNDB
PK00576 EK8
EJ1 DF10
R45 10K
R201 10K
R44 220
U36 4558 8PIN+8VB 4PIN-8VB
R40 10K
R200 10K
R41 220
R37 1M
R36 1M
HOR-IN U13-5 2/4
VERT-IN U11-5 2/4
EOS-VERT
VERT-STG
EOS-HOR
HOR-STG
GNDB
PK00359 HJ2
EJ18 DF10
HOR-OUT U13-10 2/4
VERT-OUT U11-10 2/4
R42 220
R38 220
R43 1M
R39 1M
10K RA2
10K RA1
CP2
CP3
U58 556 VCC OUT DIS THR TRI CON VEE
R182 22K
R185 270K
R193 9.3K
R184 9.3K
C87 .47
C86 .1
RY6
R82 10K
R145 1M
R83 4.99K
U56 4558 8PIN +15V 4PIN -15V
R33 11.5K
R60 8.25K
R59 10K
R62 34.8K
RY4
R86 10K
R87 10K
R61 1.8K
R85 4.99K
R84 4.99K
STIGM/X U45-7 1/4
VREF CP1 1/4
ST-X R104 4/4
ST-Y R98 4/4
R30 11.5K
R58 8.25K
STIGM/Y U44-7 1/4
R55 10K
R56 34.8K
RY3
R148 10K
R149 10K
R57 1.8K
R147 4.99K
R146 4.99K
EJ13 PK00576 EK2 DF5
EJ12 OPTION DF5
IMAGE-X R187 4/4
IMAGE-Y R186 4/4
OL/FINE R23 1/4
-15V
+15V
GND
VREF
STIGM/X
STIGM/Y
EJ11 PK00571 DF1 DF15
-8VB +8VB
ATT RAD
EJ20 DF10
TV-CON
PHOTO-LED
+8V
-8V
GND
+5V
AD5
AD4
AD3
AD2
AD1
AD0
PK00711 EH19
EJ16 DF15
U24-13 2/4
TV-OUT U15-10 2/4
U39 358 8PIN+15V 4PINGND
R46 220
R47 1M
NC
CL/VREF
CL/IN
GND
PK00571 DE5
EJ7 DF5
CL/VREF
CL/IN
R115 1/4
D8
D7
D14
D13
D6
RY4
RY3
RY6
RY5
RY1
RY2
5V
#NC5
#NC4
#NC3
STIG-HI
STIG-VR
#ALIM ON
#2KV
OL RES5V
PK00711 EH7
DFU R188 1/4
R202 10K
DFU ON
ATT DFU
C4 .01
C8 .01
C1 .01
C7 .01
C103 .01
C6 .01
C9 .01
C5 .01
C14 220/25
B 88/05/07 S.S
A 88/03/23 S.S
NOTES
1.
2
3
4
5
DWG.NAME Y.SATOH
DWG.DATE 87/12/22
TITLE Lens Drive Board
MARK EJ
DWG.NO PK00710
PAGE 3/4

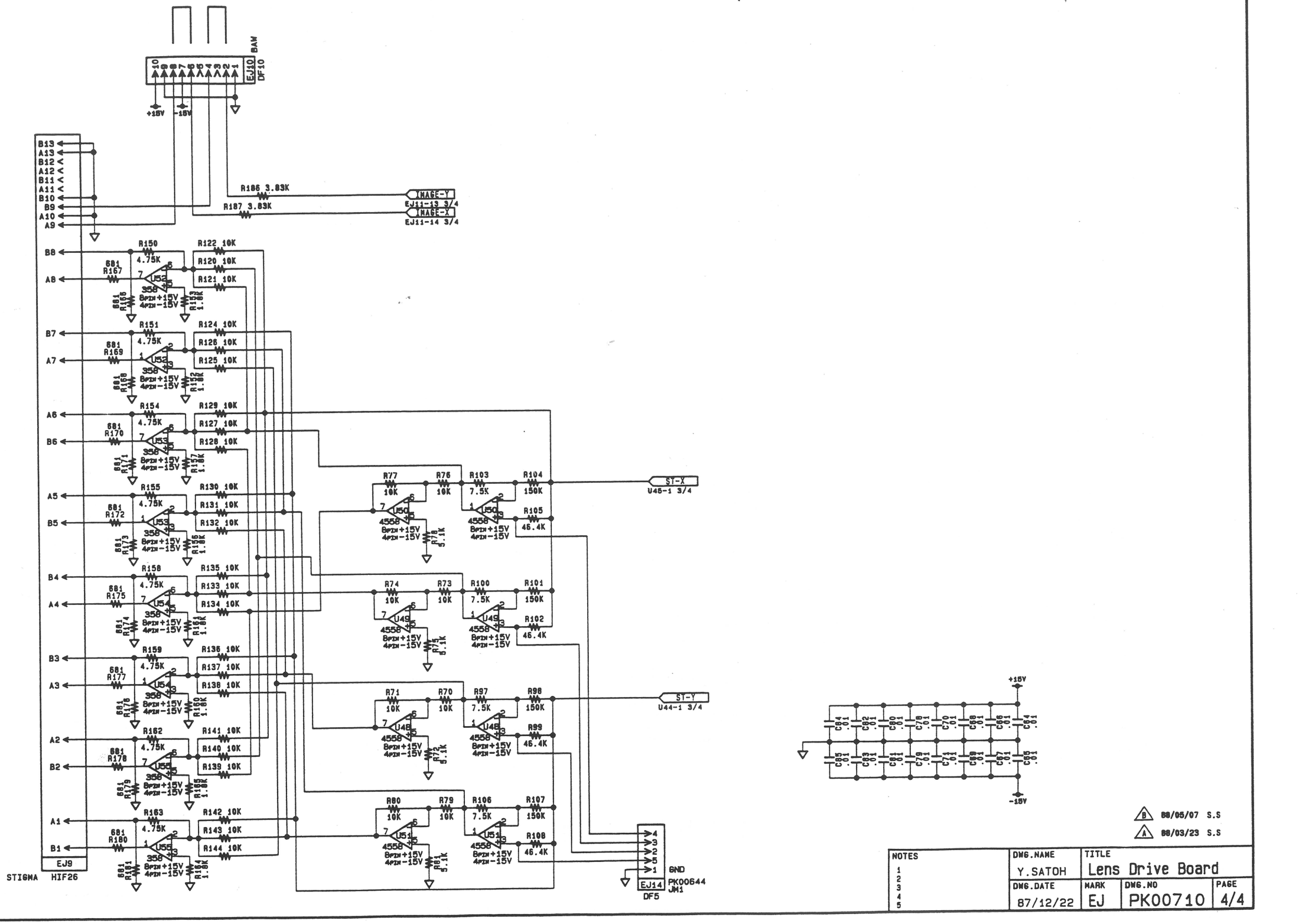

B 88/05/07 S.S

A 88/03/23 S.S

NOTES	DWG.NAME	TITLE			
1	Y.SATOH	Lens Drive Board			
2					
3	DWG.DATE	MARK	DWG.NO	PAGE	
4	87/12/22	EJ	PK00710	4/4	
5					

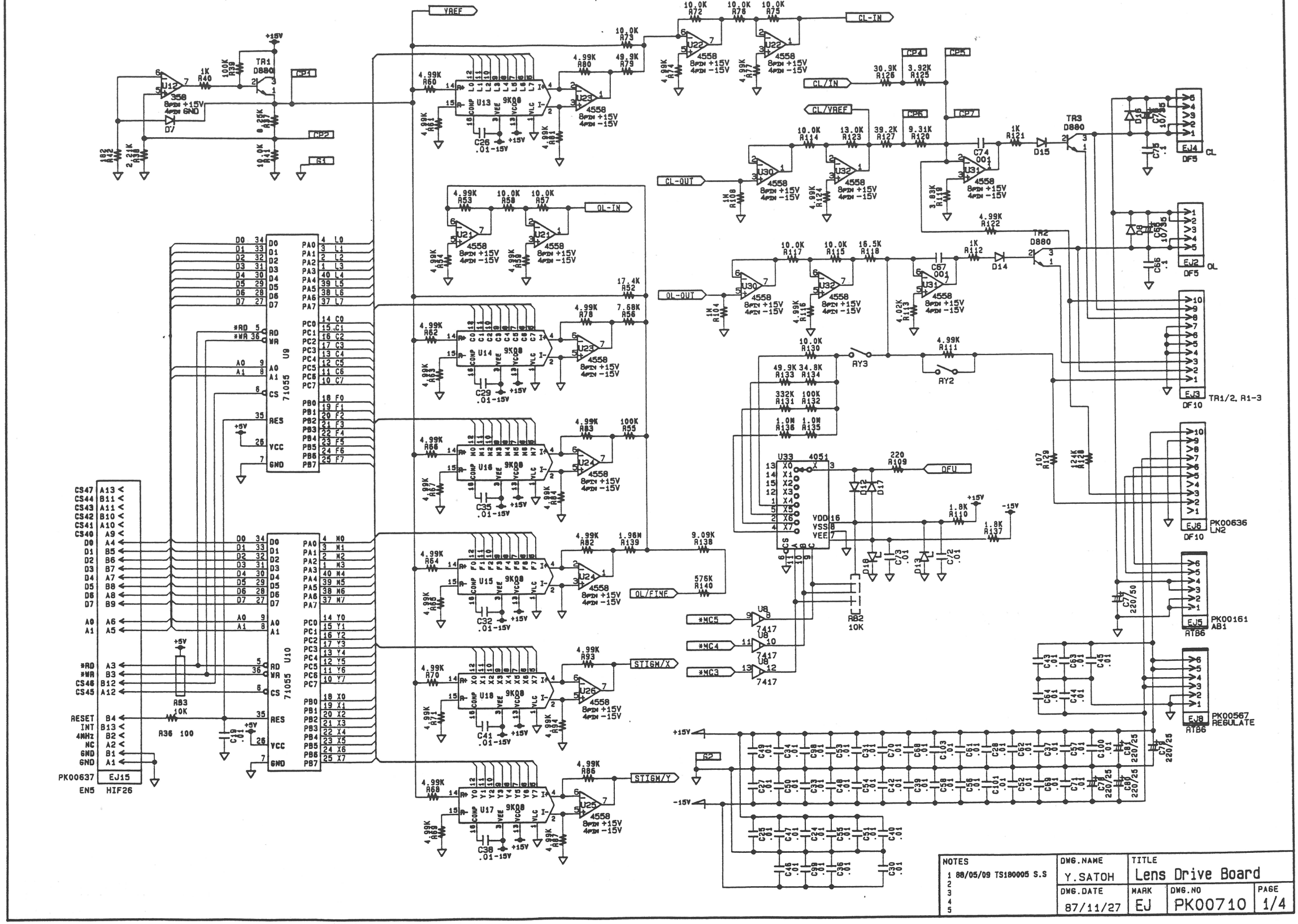

NOTES	DWG.NAME	TITLE		
1 88/05/09 TS180005 S.S 2 3 4 5	Y.SATOH	Lens Drive Board		
	DWG.DATE	MARK	DWG.NO	PAGE
	87/11/27	EJ	PK00710	1/4

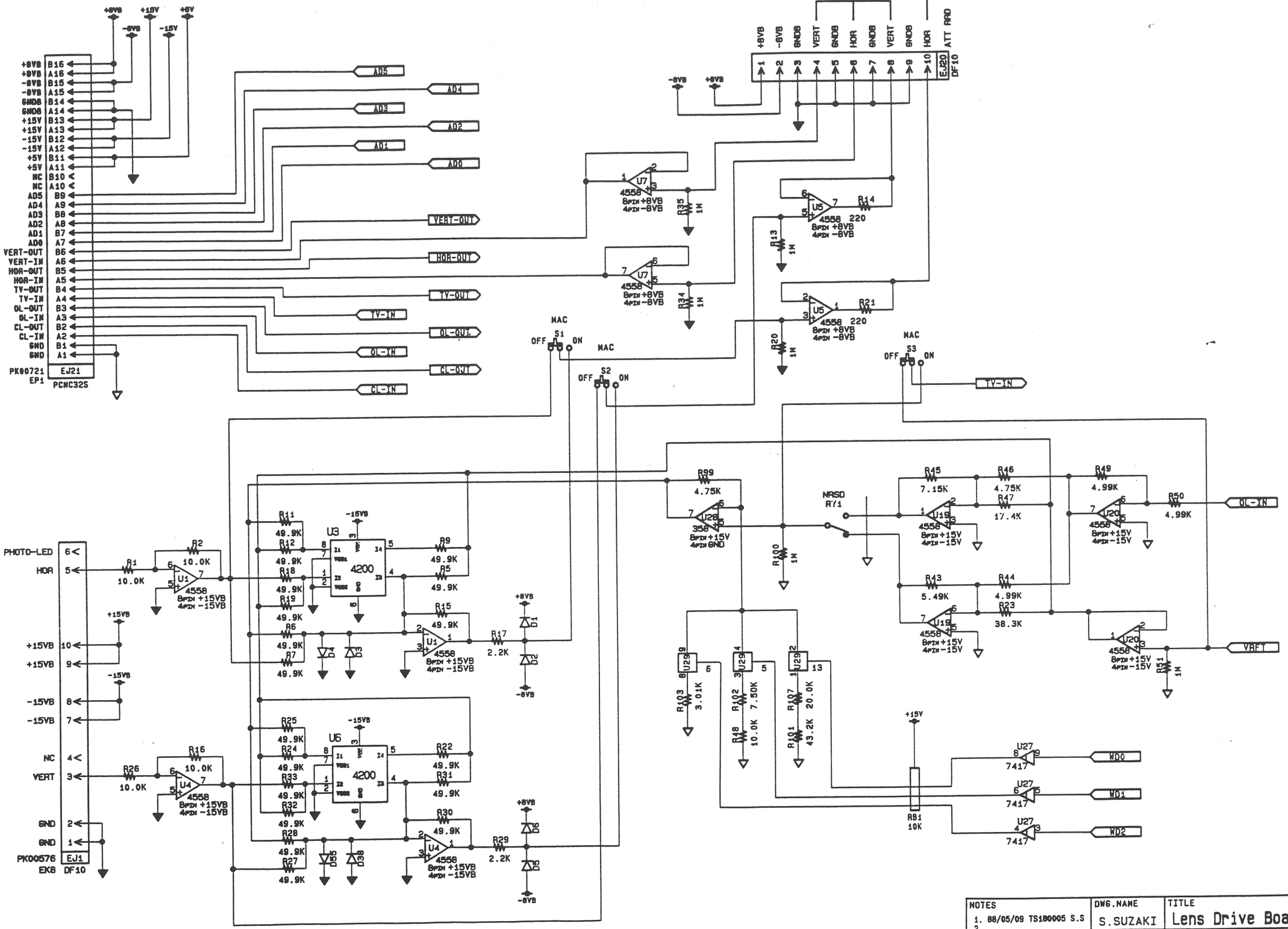

NOTES	DWG.NAME	TITLE			
1. 88/05/09 TS180005 S.S 2 3 4 5	S.SUZAKI	Lens Drive Board			
	DWG.DATE	MARK	DWG.NO	PAGE	
	88/05/09	EJ	PK00710	2/4	

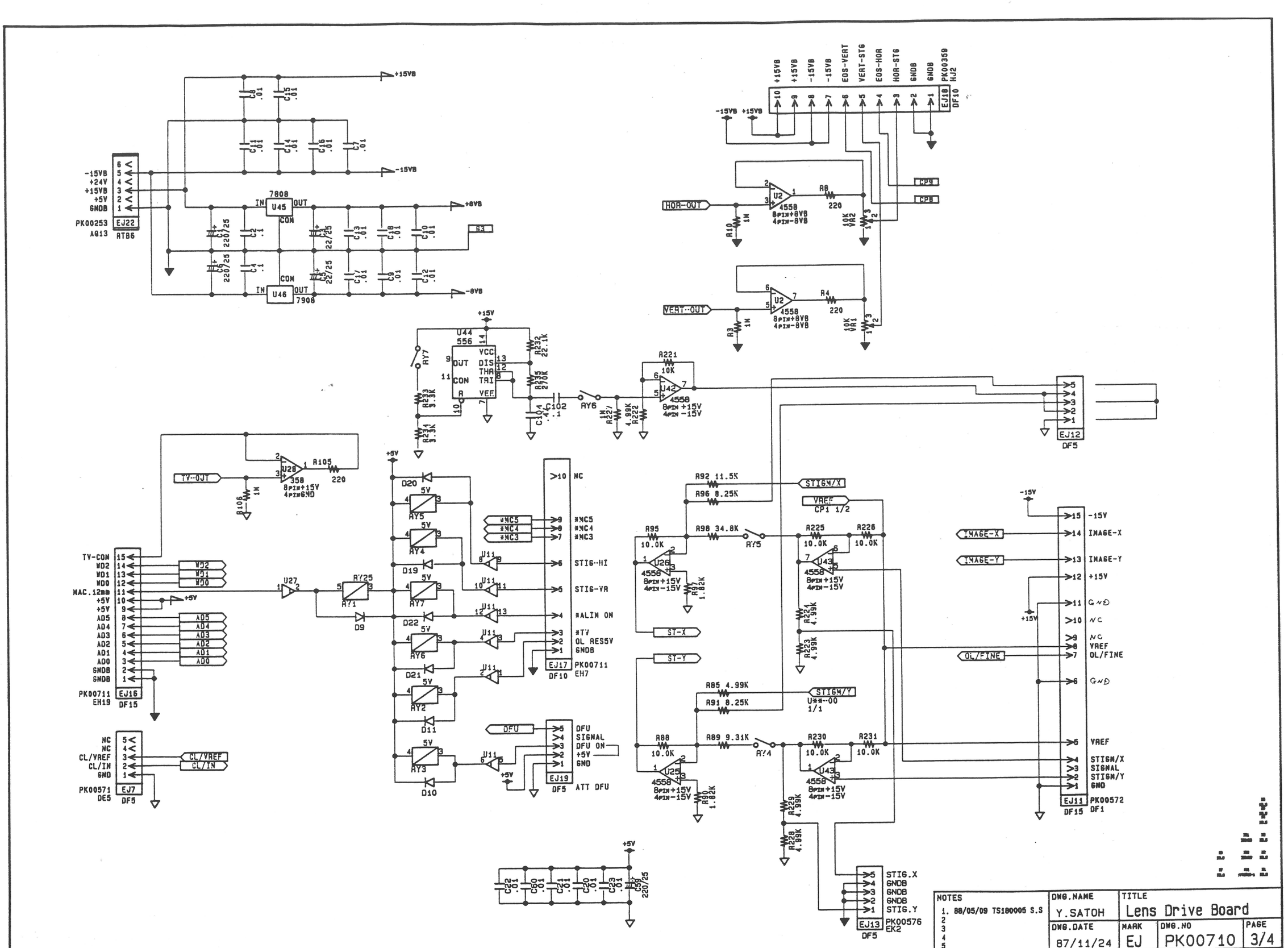

NOTES
1. 88/05/09 TS180005 S.S
2
3
4
5

DWG.NAME	TITLE
Y.SATOH	Lens Drive Board
DWG.DATE	MARK / DWG.NO / PAGE
87/11/24	EJ / PK00710 / 3/4

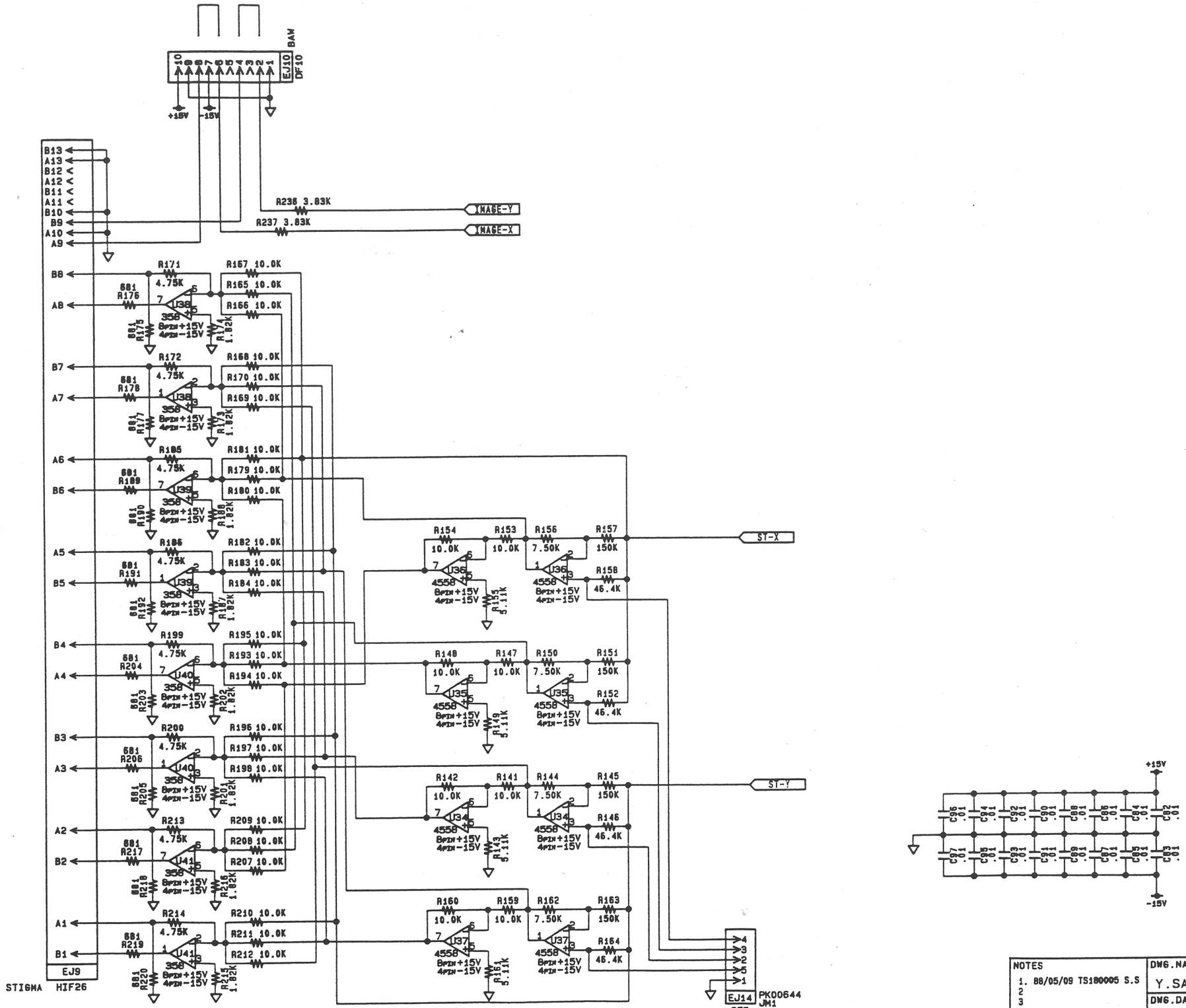

NOTES	DWG.NAME	TITLE		
1. 88/05/09 TS180005 S.S	Y.SATOH	Lens Drive Board		
2	DWG.DATE	MARK	DWG.NO	PAGE
3	87/11/27	EJ	PK00710	4/4
4				
5				

NOTES	DWG.NAME	TITLE		
1. 87/04/22 S.S 2. 87/12/22 T.S 3. 89/01/20 S.SUZAKI 4 5	T.SATOH	Scanning Board		
	DWG.DATE	MARK	DWG.NO	PAGE
	86/08/14	EK	PK00576	1/3

NOTES	DWG.NAME	TITLE			
1. 87/04/22 S.S 2. 87/12/21 T.S 3. 89/01/20 S.SUZAKI 4 5	T.SATOH	Scanning Board			
	DWG.DATE	MARK	DWG.NO		PAGE
	86/08/16	E K	PK00576		2/3

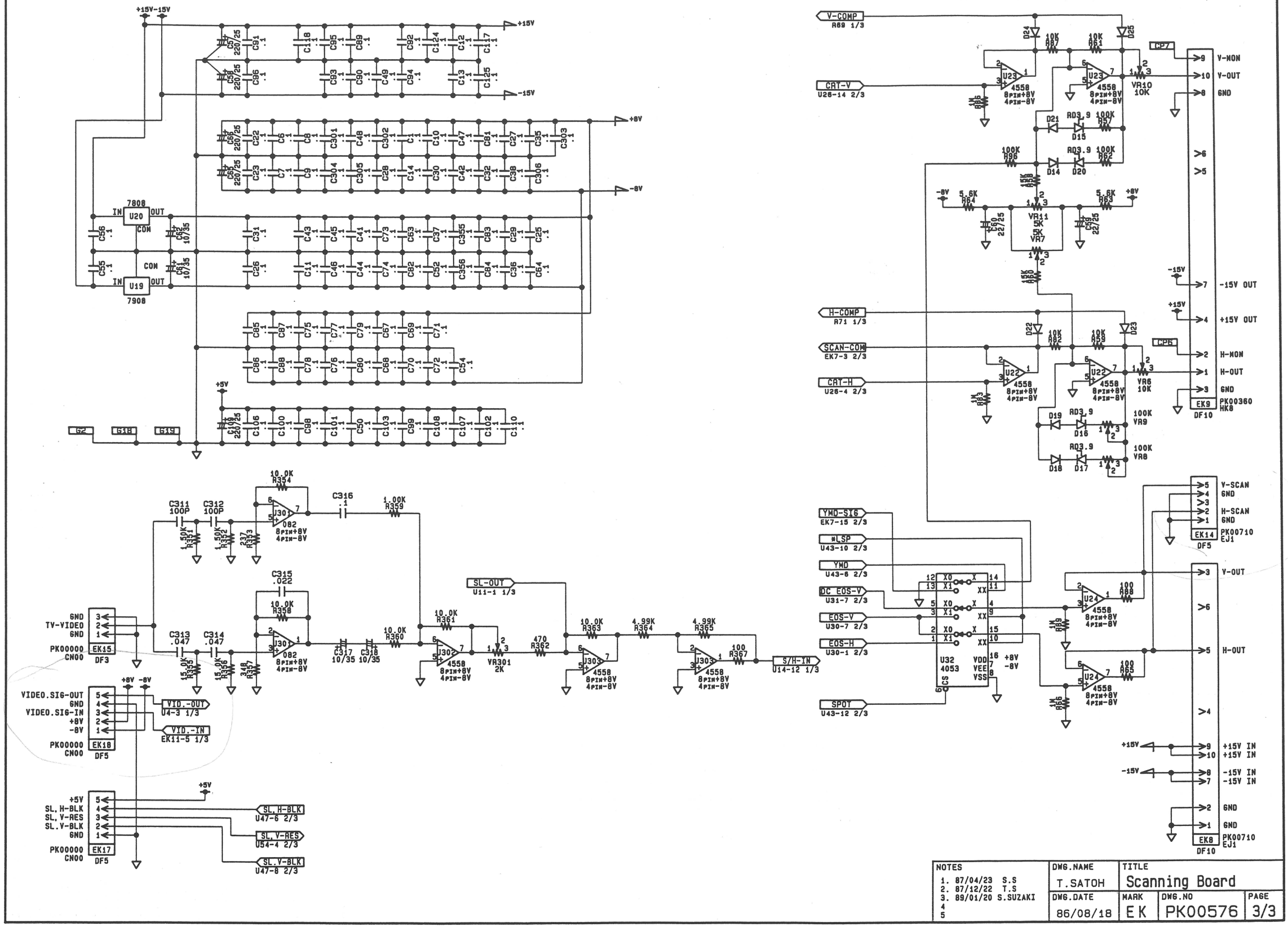

NOTES	DWG.NAME	TITLE			
1. 87/04/23 S.S 2. 87/12/22 T.S 3. 89/01/20 S.SUZAKI 4 5	T.SATOH	Scanning Board			
	DWG.DATE	MARK	DWG.NO	PAGE	
	86/08/18	EK	PK00576	3/3	

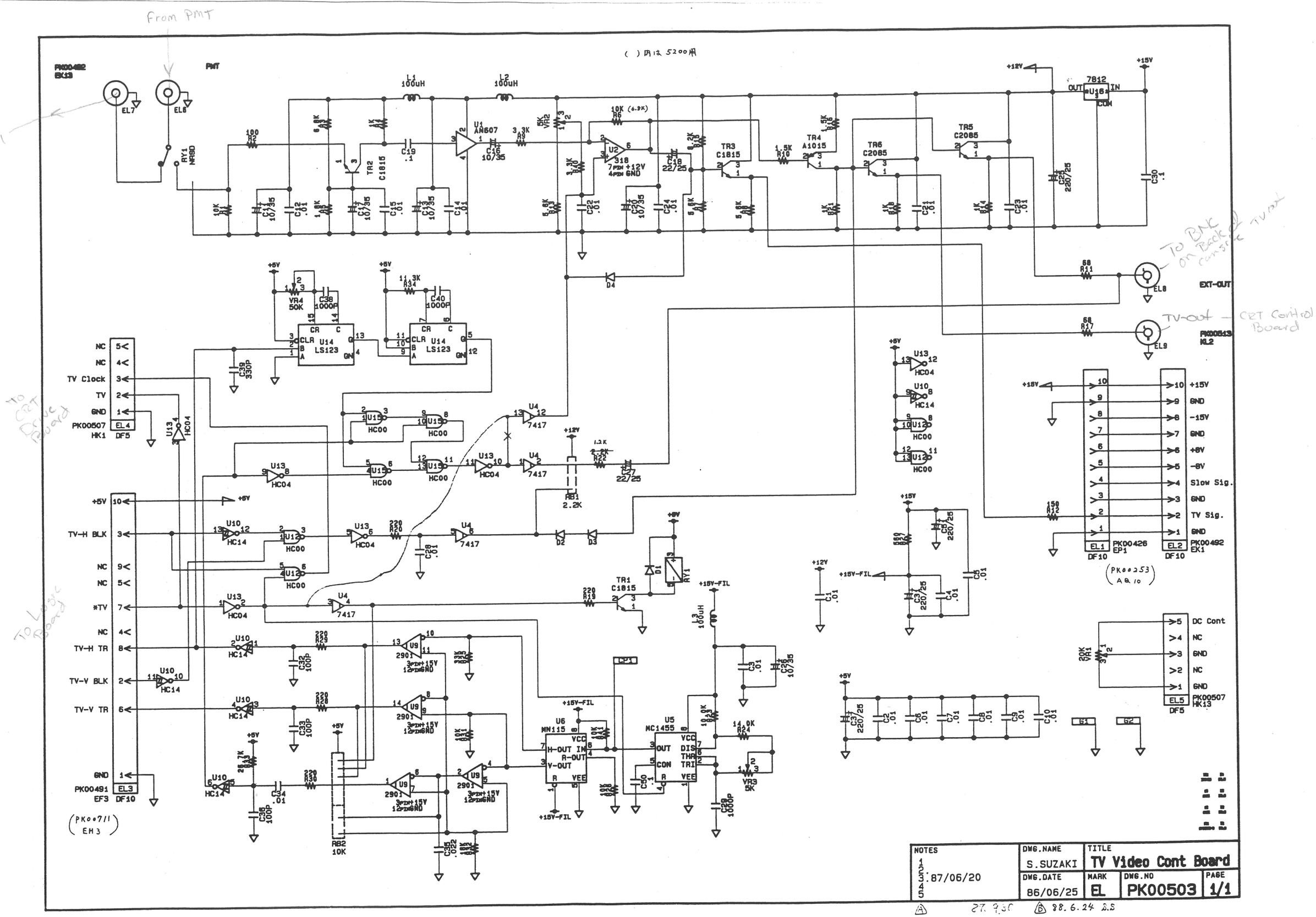
From PMT
To EK-1
( ) 内は 5200用
PK00492 EK13
PMT
EL7
EL6
RY1 NRBD
L1 100uH
L2 100uH
U1 AN607
U2 318
TR2 C1815
TR3 C1815
TR4 A1015
TR5 C2085
TR6 C2085
7812
U16
OUT
IN
COM
+12V
+15V
To BNC on Back of console TV out
EXT-OUT
EL8
TV-out — CRT Control Board
PK00513 KL2
EL9
VR4 50K
C38 1000P
C40 1000P
U14 LS123
CR
C
CLR
B
A
GN
NC
TV Clock
TV
GND
PK00507 HK1
EL4 DF5
To CRT Drive Board
U13 HC04
U15 HC00
U4 7417
RB1 2.2K
D1
D2
D3
D4
TR1 C1815
RY1
+5V
TV-H BLK
*TV
TV-H TR
TV-V BLK
TV-V TR
GND
PK00491 EF3
EL3 DF10
(PK00711 EH3)
To Logic Board
U10 HC14
U9 2901
RB2 10K
U6 MN115
H-OUT
V-OUT
R-OUT
VCC
VEE
U5 MC1455
OUT
CON
DIS
THR
TRI
VR3 5K
+15V-FIL
L3 100uH
CP1
+15V
GND
-15V
+8V
-8V
Slow Sig.
TV Sig.
PK00426 EP1
EL1 DF10
PK00492 EK1
EL2 DF10
(PK00253 AQ10)
DC Cont
PK00507 HK13
EL5 DF5
G1
G2
NOTES
1
2
3
4
5
87/06/20
DWG.NAME
S.SUZAKI
DWG.DATE
86/06/25
TITLE
TV Video Cont Board
MARK
EL
DWG.NO
PK00503
PAGE
1/1
A 87.9.30
B 88.6.24 S.S

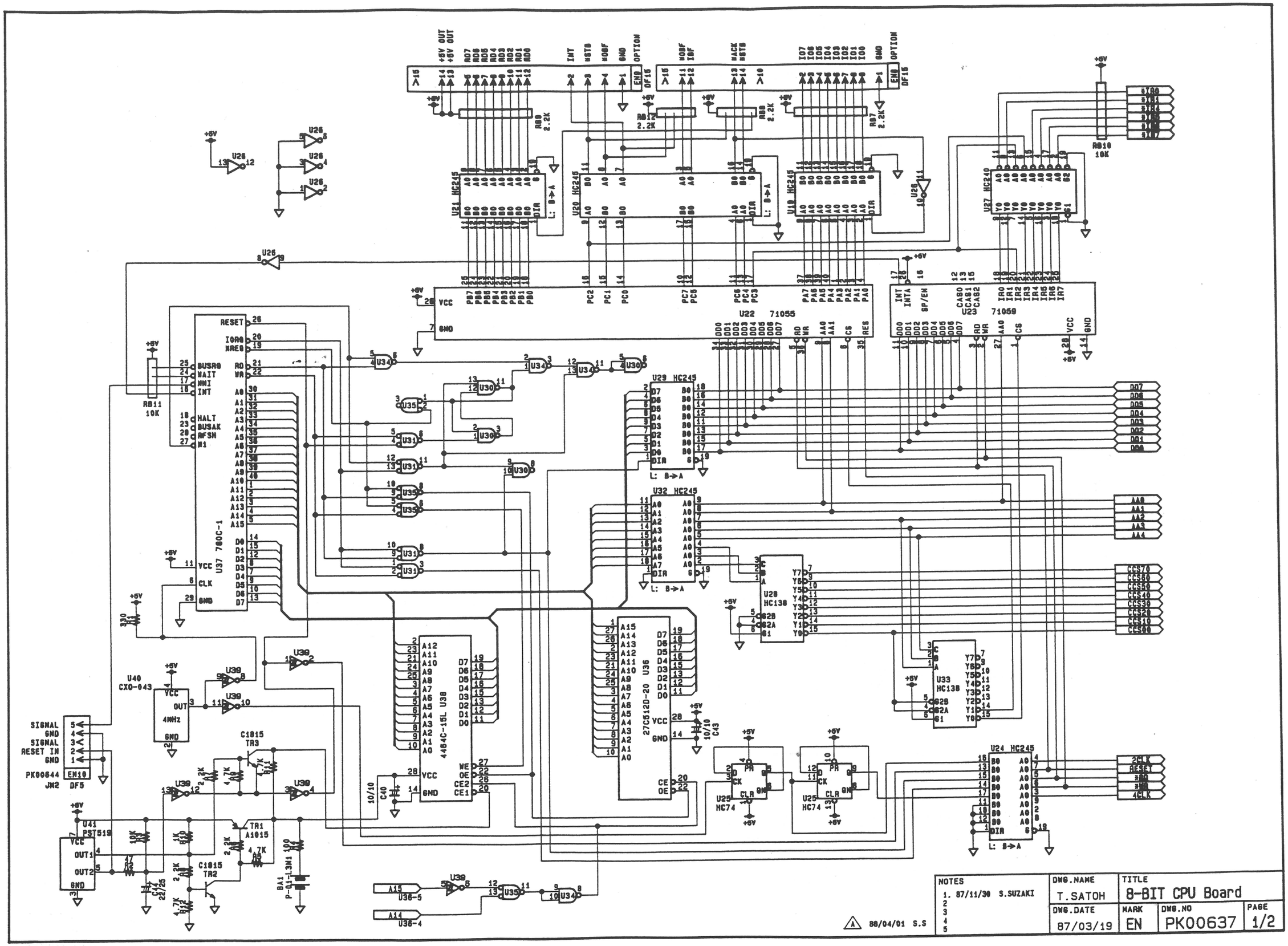
U22 71055
U23 71059
U37 780C-1
U29 HC245
U32 HC245
U28 HC138
U33 HC138
U24 HC245
U25 HC74
U36 27C512D-20
U38 4464C-15L
U40 CXO-043
U41 PST519
PK00644 JM2 DF5
SIGNAL
GND
SIGNAL
RESET IN
GND
NOTES
1. 87/11/30 S.SUZAKI
2
3
4
5
A 88/04/01 S.S
DWG.NAME T.SATOH
DWG.DATE 87/03/19
TITLE 8-BIT CPU Board
MARK EN
DWG.NO PK00637
PAGE 1/2

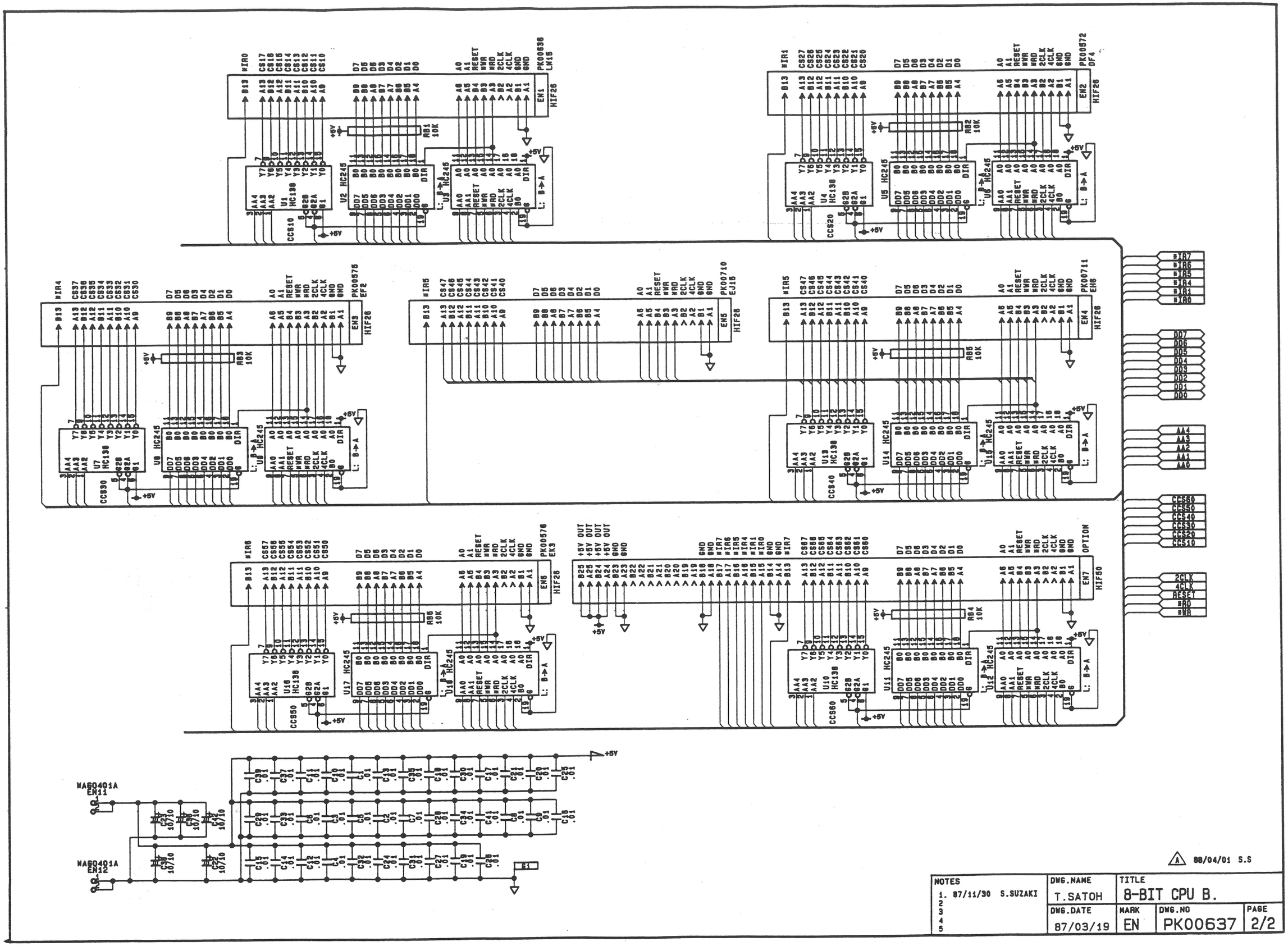

A 88/04/01 S.S

NOTES	DWG.NAME	TITLE			
1. 87/11/30 S.SUZAKI	T.SATOH	8-BIT CPU B.			
2	DWG.DATE	MARK	DWG.NO	PAGE	
3	87/03/19	EN	PK00637	2/2	
4					
5					

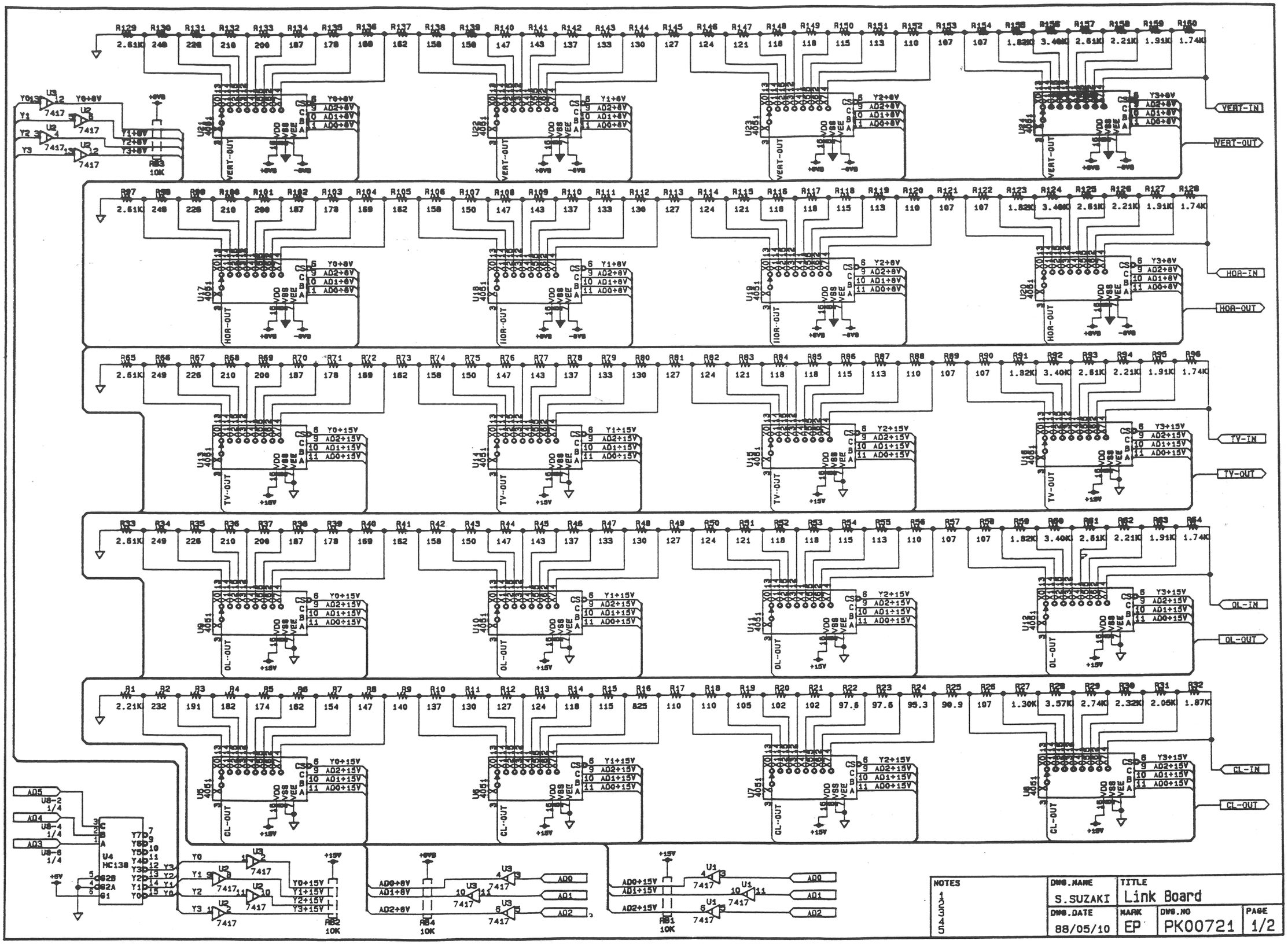
VERT-IN
VERT-OUT
HOR-IN
HOR-OUT
TV-IN
TV-OUT
OL-IN
OL-OUT
CL-IN
CL-OUT
NOTES
DWG.NAME
S.SUZAKI
TITLE
Link Board
DWG.DATE
88/05/10
MARK
EP
DWG.NO
PK00721
PAGE
1/2

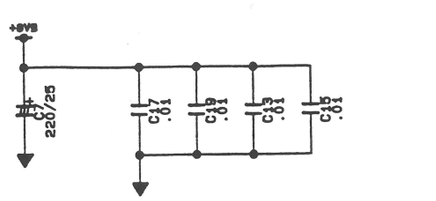

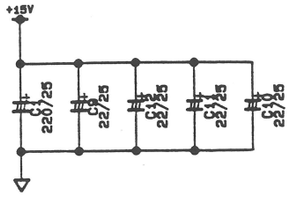

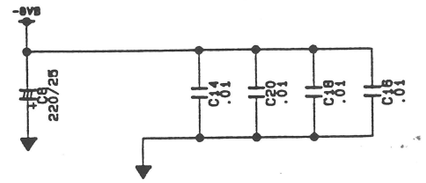

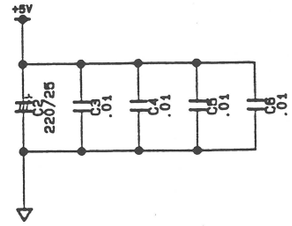

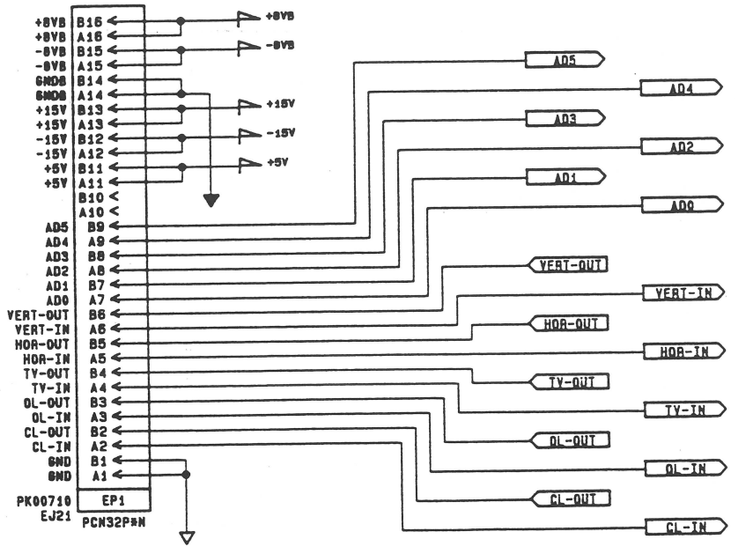

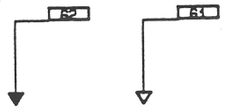

NOTES	DWG.NAME	TITLE			
1 2 3 4 5	S.SUZAKI	Link Board			
	DWG.DATE	MARK	DWG.NO		PAGE
	88/05/10	EP	PK00721		2/2

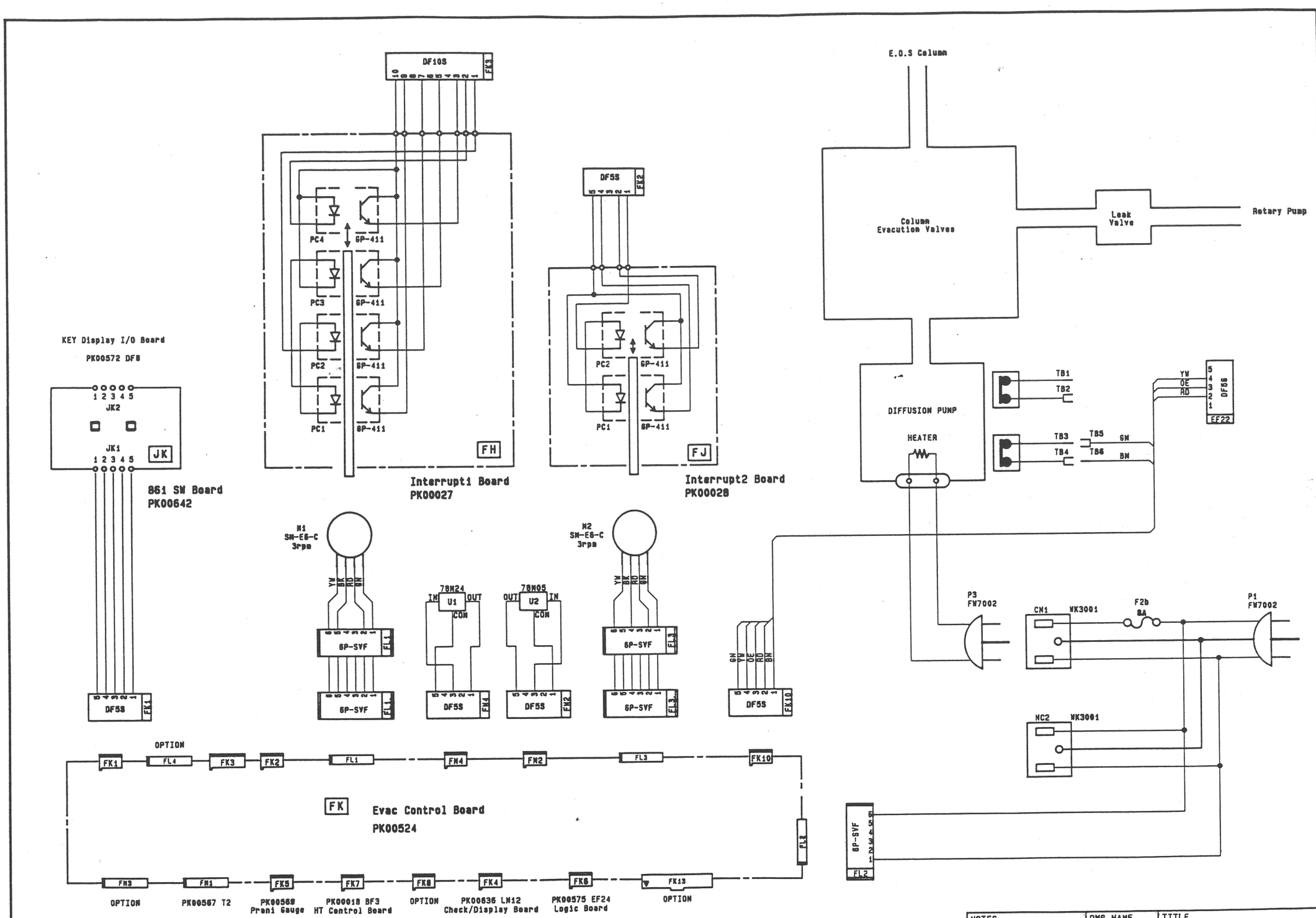

NOTES	DWG.NAME	TITLE
1. 87/12/14 TS180001 S. 2. 88/06/03 TS180005 S.S 3 4 5	S.SUZAKI	Evacuation Controller
	DWG.DATE: 87/05/18	MARK: FF / DWG.NO: PK00647 / PAGE: 1/1

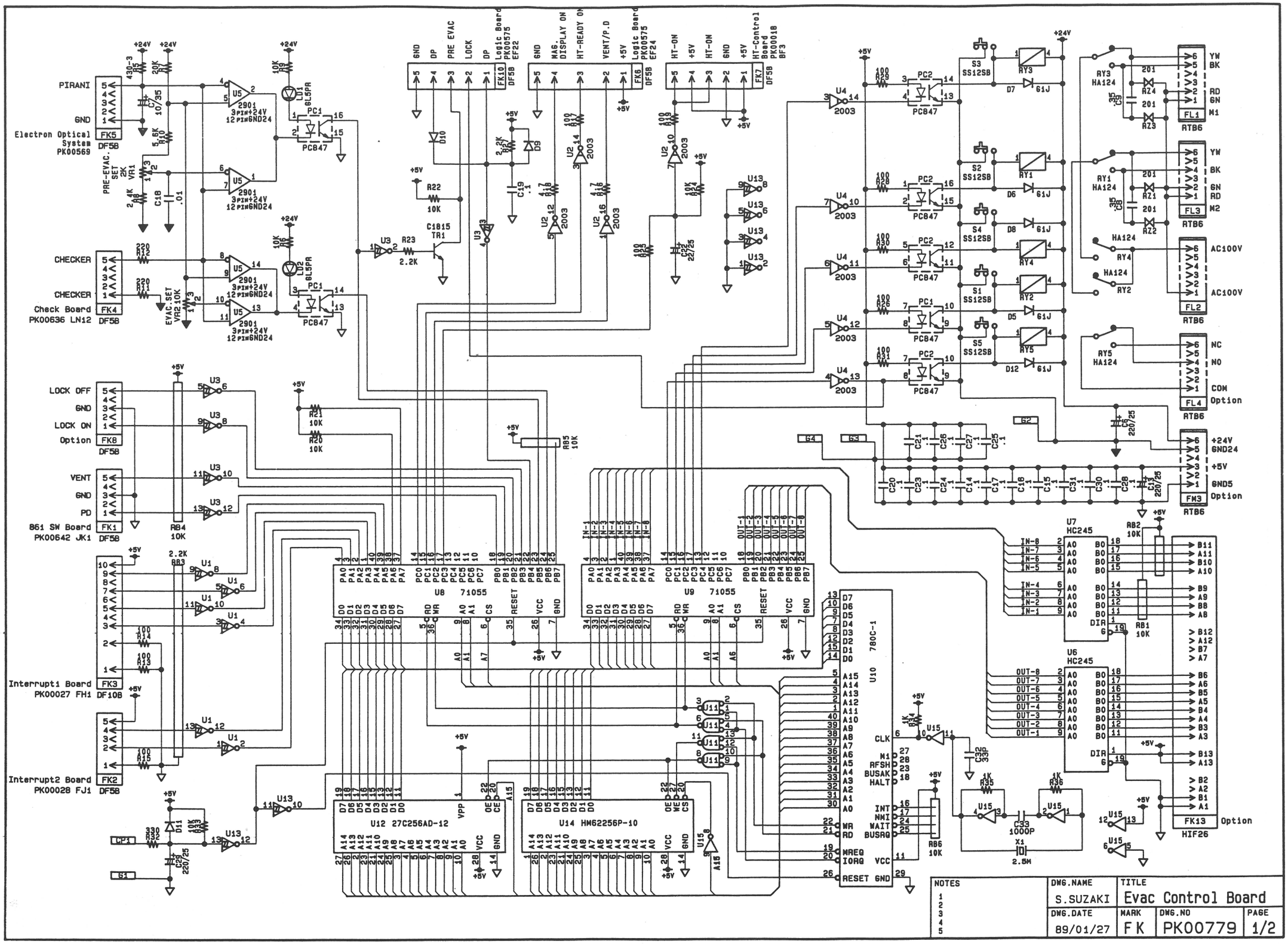
PIRANI
GND
Electron Optical System PK00569
CHECKER
CHECKER
Check Board PK00636 LN12
LOCK OFF
GND
LOCK ON
Option
VENT
GND
PD
861 SW Board PK00642 JK1
Interrupt1 Board PK00027 FH1
Interrupt2 Board PK00028 FJ1
U8 71055
U9 71055
U10 780C-1
U12 27C256AD-12
U14 HM62256P-10
U7 HC245
U6 HC245
YW
BK
RD
GN
M1
M2
AC100V
NC
NO
COM
Option
+24V
GND24
+5V
GND5
Option
Option
HIF26
NOTES
DWG.NAME
S.SUZAKI
TITLE
Evac Control Board
DWG.DATE
89/01/27
MARK
FK
DWG.NO
PK00779
PAGE
1/2

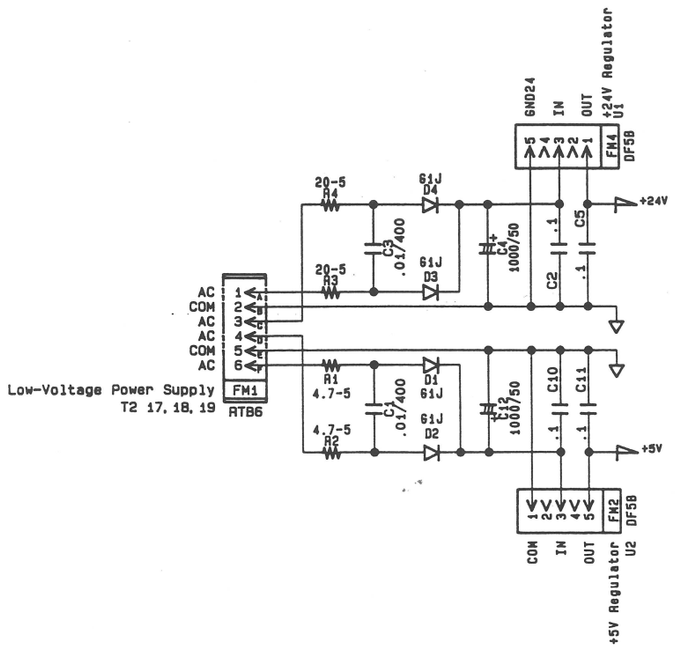

NOTES	DWG.NAME	TITLE			
1 2 3 4 5	S.SUZAJI	Evac Control Board			
	DWG.DATE	MARK	DWG.NO		PAGE
	89/01/27	F K	PK00779		2/2

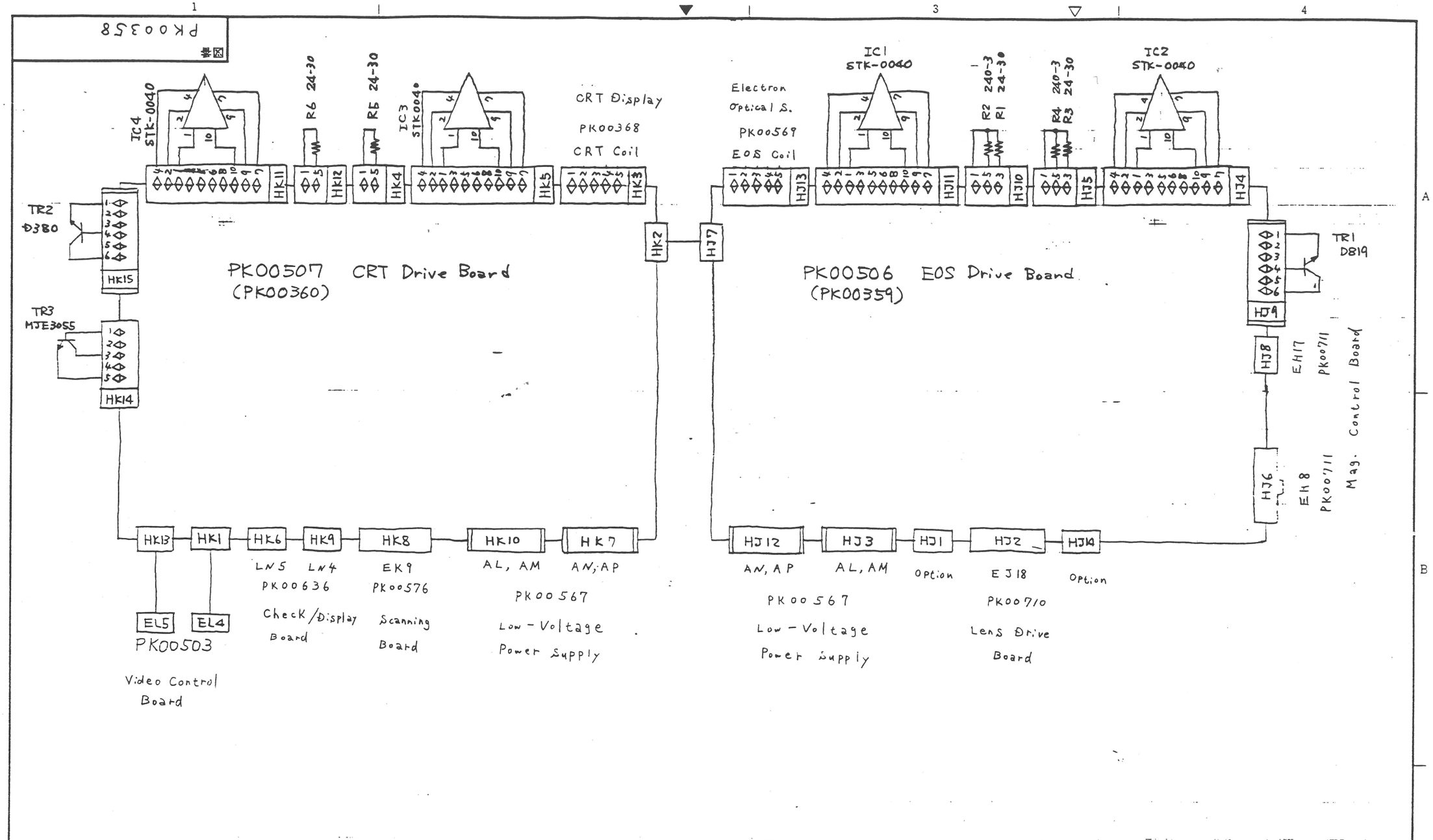

△	記事					出図印
△						
△						
△	承認	検図	設計	製図	写図	
△	佐 63.6 蓮				頭 63.6.23 崎	HH
△						
△						
△ 新製 63.6.23	名称 5200のみ Deflection Coil Driver				図番 PK00358	
訂正						

Y 5027 A3 (E) 58.6 1000

株式会社 日電子テクニクス

FLOWCHART-SHEET

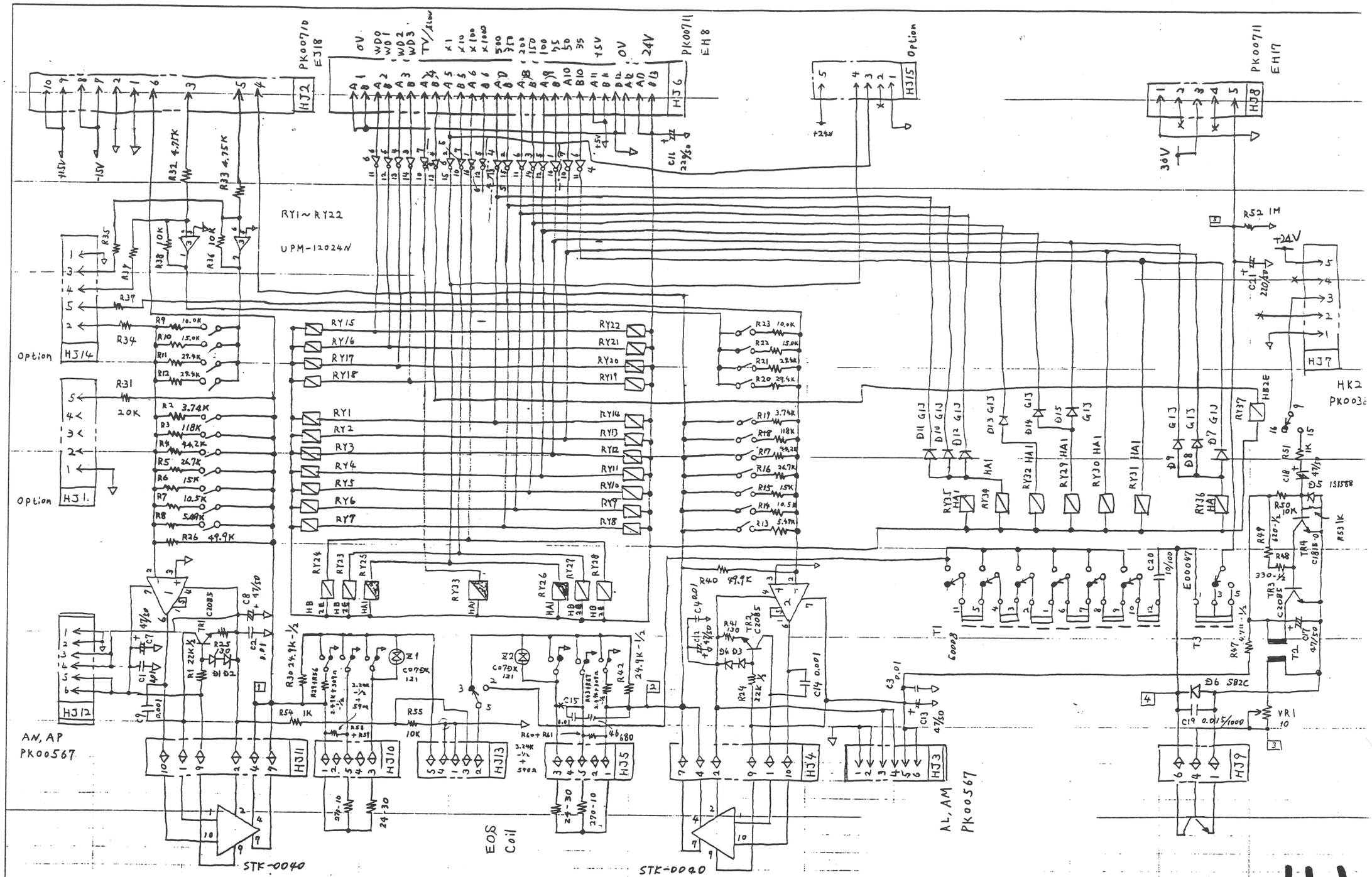

NOTE	CHART NAME 5200 のみ	NO.	PAGE
	EOS Drive Board	PK00359	
	PROGRAMMER / DATE 88・6・24	INSPECTOR / DATE	

FLOWCHART-SHEET

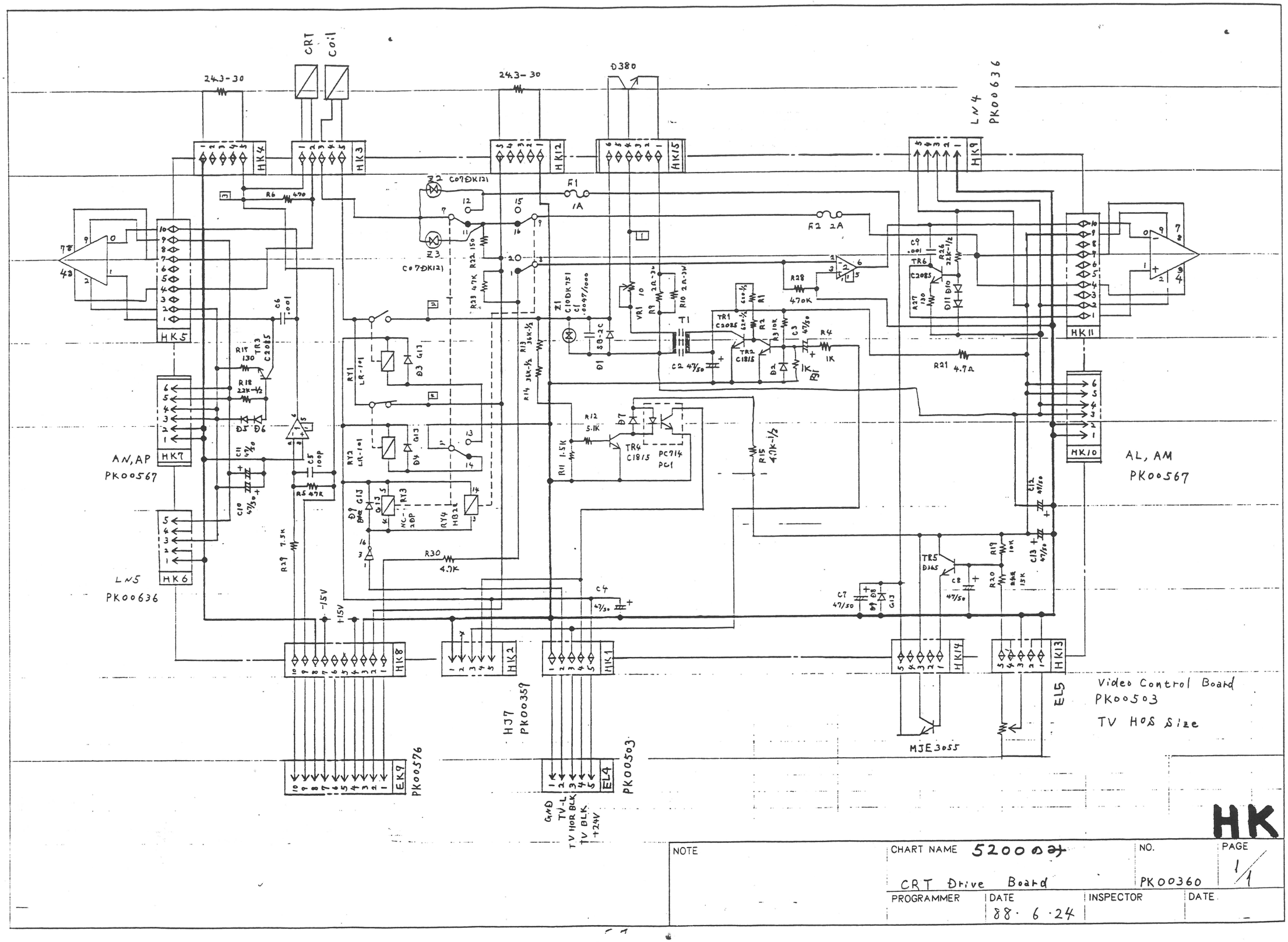

HK

NOTE	CHART NAME 5200027	NO.	PAGE
	CRT Drive Board	PK00360	1/1
	PROGRAMMER	DATE 88·6·24	INSPECTOR / DATE

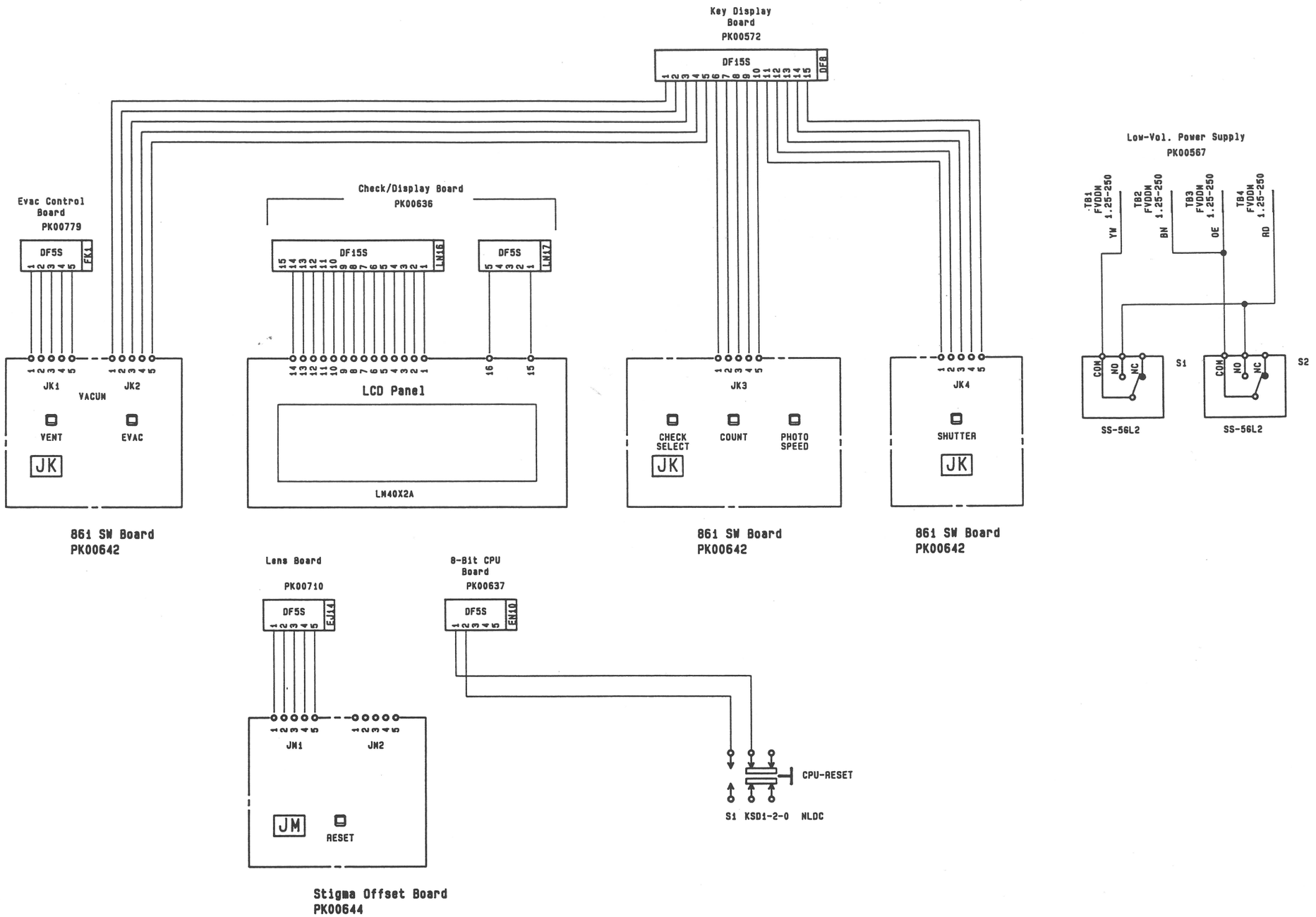

NOTES	DWG.NAME	TITLE			
1. ..... 2. TC020396 87/05/11 3. 87/12/14 TS180001 S. 4. 88/06/04 TS180005 S.S 5. 89/01/27 S.SUZAKI	S.SUZAKI	LED Display			
	DWG.DATE	MARK	DWG.NO	PAGE	
	87/05/20	J J	PK00580	1/1	

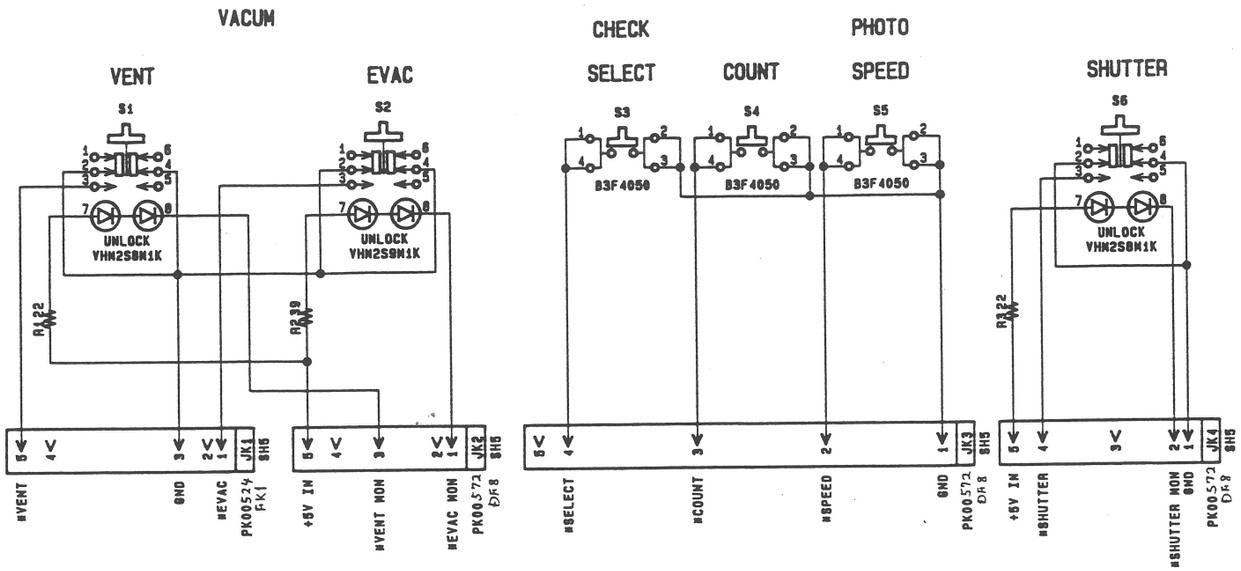

NOTES	DWG.NAME	TITLE
1. 87/12/15 TS180001 Y.	T.SATOH	5200 SW BOARD
2	DWG.DATE	MARK / DWG.NO / PAGE
3	86/04/04	JK / PK00642 / 1/1
4		
5		

Stigma Offset

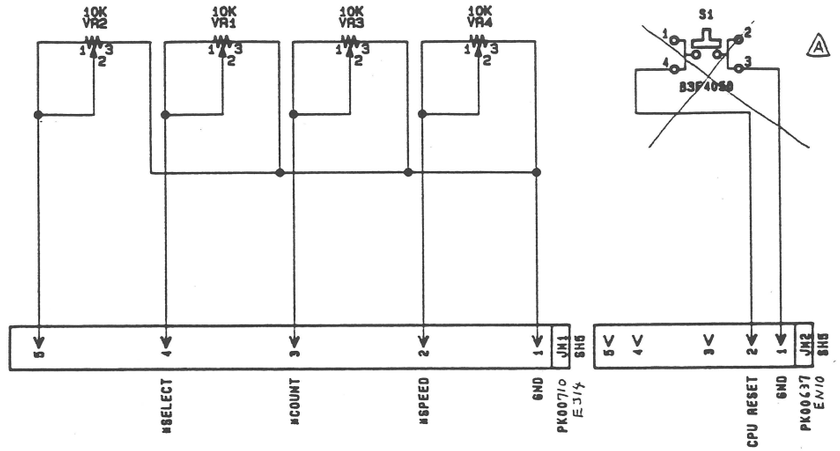

~~STIGMA OFFSET~~

△ 88/07/01 TS180003~ S.S

NOTES	DWG.NAME	TITLE			
1.87/11/30 2. 3 4 5	Y.SATOH	STIGMA OFFSET B			
	DWG.DATE	MARK	DWG.NO	PAGE	
	87/04/14	JM	PK00644	1/1	

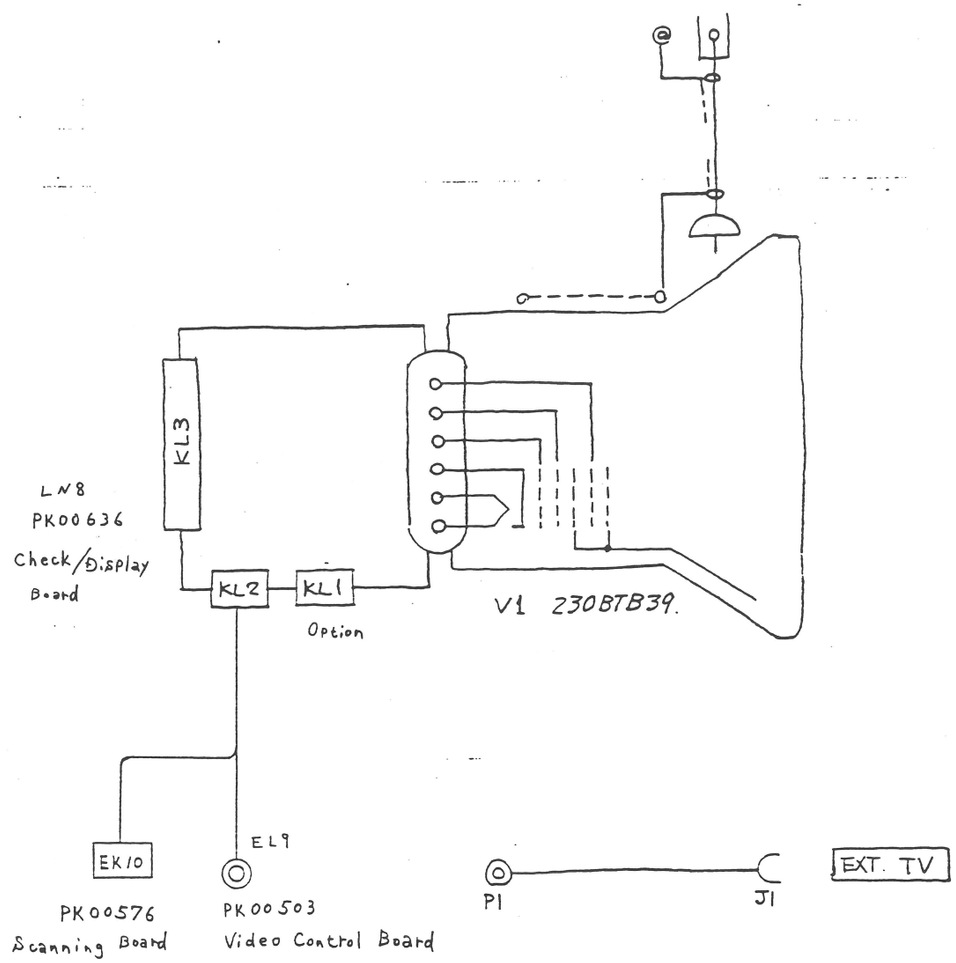

△						
△						
△						
△						
△						
△						
△						
⚠新製 63.6.24						
訂正						

記事

出図印 KK

承認	検図	設計	製図	写図
				63.6.24

名称 5200のみ CRT DISPLAY.

図番 PK00368

株式会社 日電子テクニクス

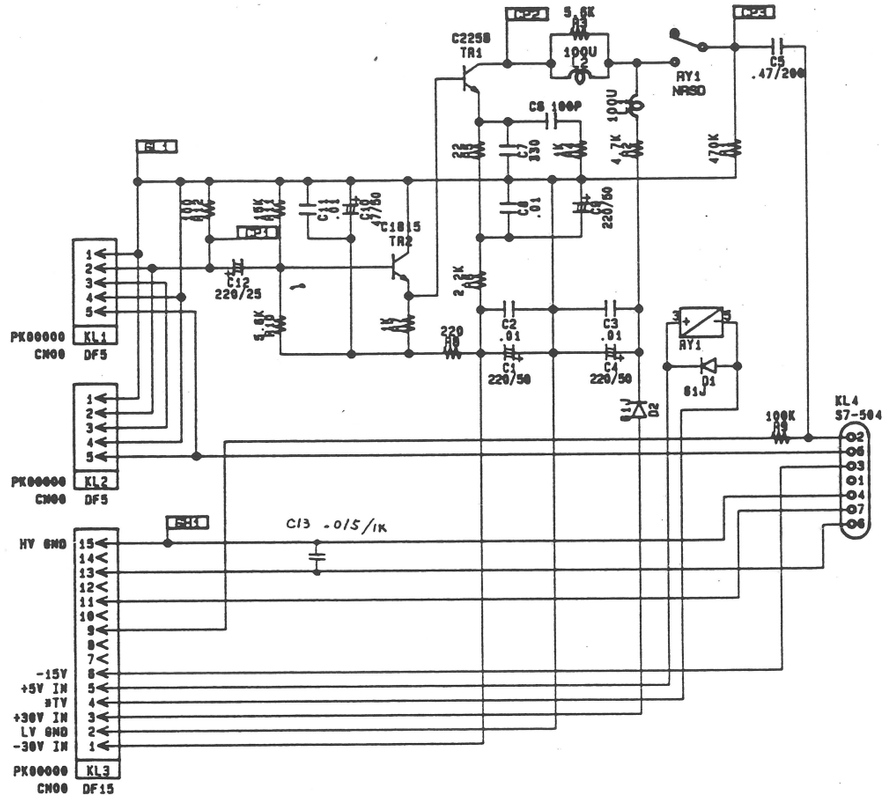

A 88/04/18

NOTES	DWG.NAME	TITLE		
1 2 3 4 5	T.SATOH	CRT Contorol Board		
	DWG.DATE	MARK	DWG.NO	PAGE
	86/08/19	KL	PK00513	1/1

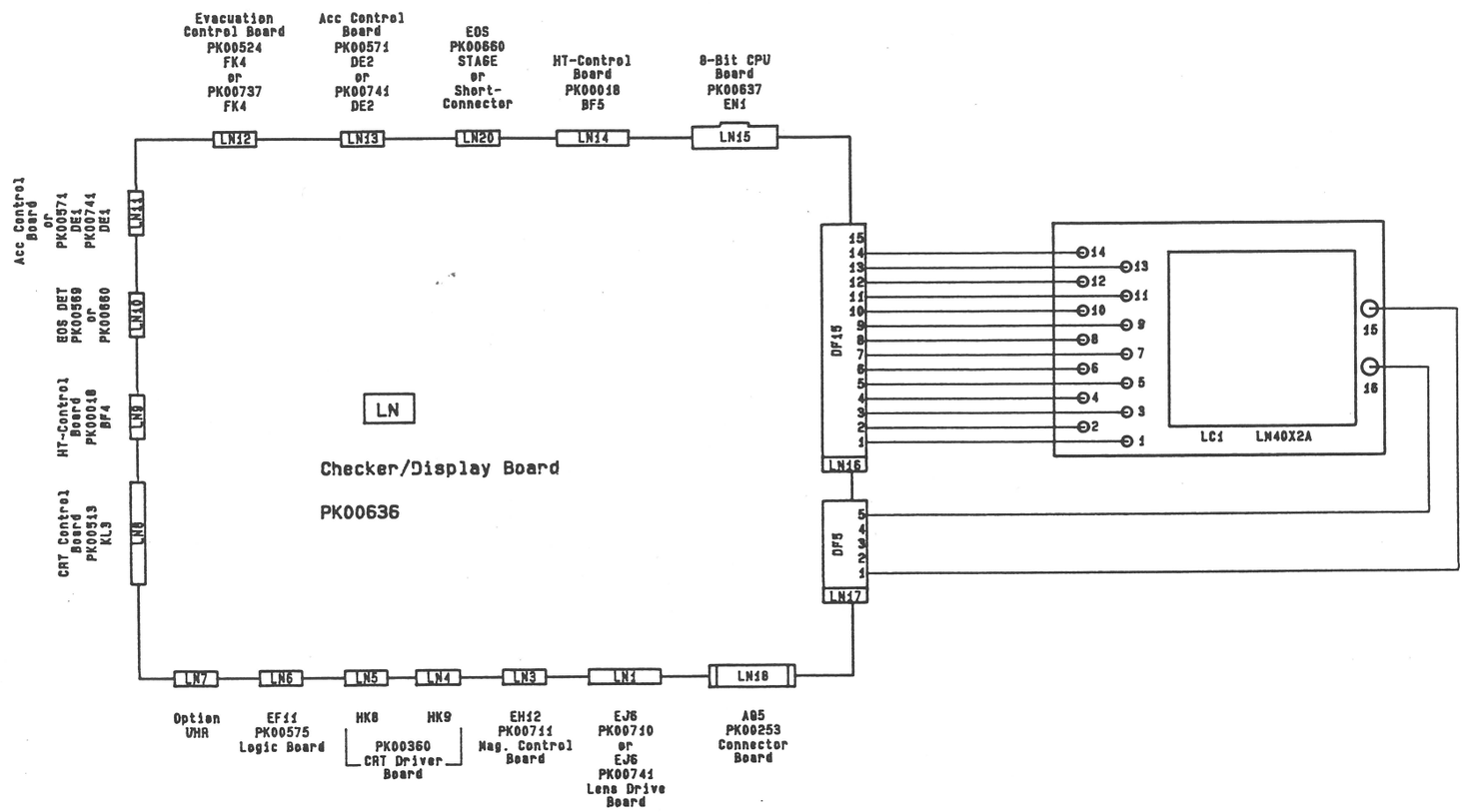

NOTES	DWG.NAME	TITLE		
1. 87/12/14 TS180001 S. 2. 88/12/19 S.SUZAKI 3 4 5	Y.SATOH	Checker		
	DWG.DATE	MARK	DWG.NO	PAGE
	87/05/09	L L	PK00653	1/1

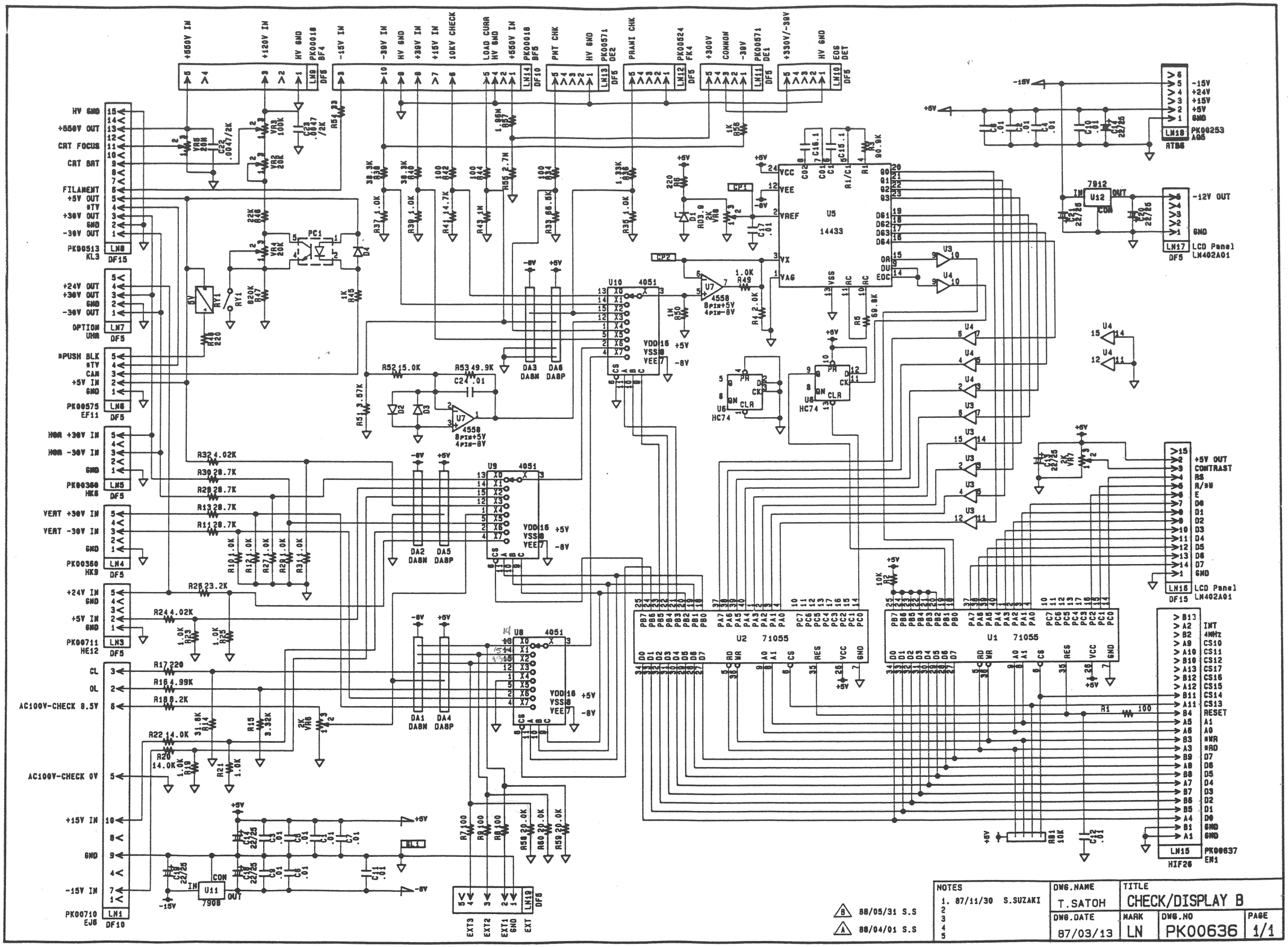
+550V IN
+120V IN
HV GND
PK00018 BF4
-15V IN
-30V IN
HV GND
+30V IN
+15V IN
10KV CHECK
LOAD CURR
HV GND
+550V IN
PK00018 BF5
PMT CHK
HV GND
PK00571 DE2
PRANI CHK
PK00624 FK4
+300V
COMMON
-30V
PK00571 DE1
+330V/-30V
HV GND
EOS DET
HV GND
+550V OUT
CRT FOCUS
CRT BRT
FILAMENT
+5V OUT
±TV
+30V OUT
GND
-30V OUT
PK00513 KL3
LN8 DF15
+24V OUT
+30V OUT
GND
-30V OUT
OPTION UNA
LN7 DF5
±PUSH BLK
±TV
CAM
+5V IN
GND
PK00575 EF11
LN6 DF5
HOR +30V IN
HOR -30V IN
GND
PK00360 HK8
LN5 DF5
VERT +30V IN
VERT -30V IN
GND
PK00360 HK9
LN4 DF5
+24V IN
GND
+5V IN
GND
PK00711 HE12
LN3 DF5
CL
OL
AC100V-CHECK 8.5V
AC100V-CHECK 0V
+15V IN
GND
-15V IN
PK00710 EJ6
LN1 DF10
-15V
+6V
-15V
+24V
+15V
+5V
GND
PK00253 A05
LN18 ATB6
7912
-12V OUT
GND
LN17 DF5 LCD Panel LN402A01
+5V OUT
CONTRAST
RS
R/±W
E
D0
D1
D2
D3
D4
D5
D6
D7
GND
LN16 DF15 LCD Panel LN402A01
INT
4MHz
CS10
CS11
CS12
CS17
CS16
CS15
CS14
CS13
RESET
A1
A0
±WR
±RD
D7
D6
D5
D4
D3
D2
D1
D0
GND
GND
LN15 HIF26 PK00637 EN1
EXT3
EXT2
EXT1
GND
EXT
LN19 DF5
U1 71055
U2 71055
U5 14433
U6 HC74
U7 4558 8PIN+5V 4PIN-8V
U8 4051
U9 4051
U10 4051
U11 7908
U12 7912
VDD 16 +5V
VSS 8
VEE 7 -8V
DA1 DA8N DA8P
DA2 DA8N DA8P
DA3 DA8N DA8P
DA4 DA8N DA8P
DA5 DA8N DA8P
DA6 DA8N DA8P
RY1
PC1
D1
D2
D3
D4
CP1
CP2
VR1 100K
VR2 20K
VR3 20K
VR4 20K
VR5 20K
VR6 2K
VR7 2K
R1 100
R2 10K
RB1 10K
R5 69.8K
R49 1.0K
R50 1K
R54 33
R55 2.7M
R56 1K
R57 1.86M
R58 20.0K
R59 20.0K
R60 20.0K
NOTES
1. 87/11/30 S.SUZAKI
B 88/05/31 S.S
A 88/04/01 S.S
DWG.NAME T.SATOH
DWG.DATE 87/03/13
TITLE CHECK/DISPLAY B
MARK LN
DWG.NO PK00636
PAGE 1/1